Metal Barrel Inductive Sensors G-Sens

G-Sens metal barrel inductive sensor, with threaded body for general use and enhanced design of back cover, which improve both its utility and protection grade. Increased sensing distance, wide applicable temperature of -30-85℃, high protection grade of IP68, those all contribute to its wide application range. Except for using in conventional industries, G-Sens is specific for kinds of harsh environments.

Threaded Metal Housing, M8 Series, M8 contact

	Type	Rated Operating Distance Sn	Mounting	Output Function	Output Type	Dimensions
	Fi2-G08-OP6L-Q8	2mm	Flush	N.O.	PNP	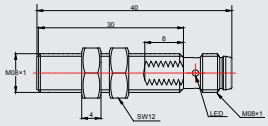
	Fi2-G08-CP6L-Q8	2mm	Flush	N.C.	PNP	
	Fi2-G08-ON6L-Q8	2mm	Flush	N.O.	NPN	
	Fi2-G08-CN6L-Q8	2mm	Flush	N.C.	NPN	
	Ni4-G08-OP6L-Q8	4mm	Non-Flush	N.O.	PNP	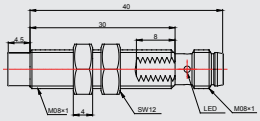
	Ni4-G08-CP6L-Q8	4mm	Non-Flush	N.C.	PNP	
	Ni4-G08-ON6L-Q8	4mm	Non-Flush	N.O.	NPN	
	Ni4-G08-CN6L-Q8	4mm	Non-Flush	N.C.	NPN	

Threaded Metal Housing, M12 Series, M12 contact

	Type	Rated Operating Distance Sn	Mounting	Output Function	Output Type	Dimensions
	Fi4-G12-OP6L-Q12	4mm	Flush	N.O.	PNP	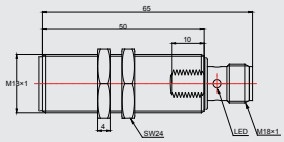
	Fi4-G12-CP6L-Q12	4mm	Flush	N.C.	PNP	
	Fi4-G12-ON6L-Q12	4mm	Flush	N.O.	NPN	
	Fi4-G12-CN6L-Q12	4mm	Flush	N.C.	NPN	
	Ni6-G12-OP6L-Q12	6mm	Non-Flush	N.O.	PNP	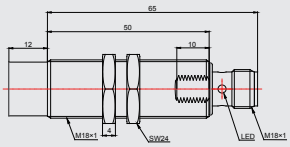
	Ni6-G12-CP6L-Q12	6mm	Non-Flush	N.C.	PNP	
	Ni6-G12-ON6L-Q12	6mm	Non-Flush	N.O.	NPN	
	Ni6-G12-CN6L-Q12	6mm	Non-Flush	N.C.	NPN	
	Ni8-G12-OP6L-Q12	8mm	Non-Flush	N.O.	PNP	
	Ni8-G12-CP6L-Q12	8mm	Non-Flush	N.C.	PNP	
	Ni8-G12-ON6L-Q12	8mm	Non-Flush	N.O.	NPN	
	Ni8-G12-CN6L-Q12	8mm	Non-Flush	N.C.	NPN	

Wiring Diagram

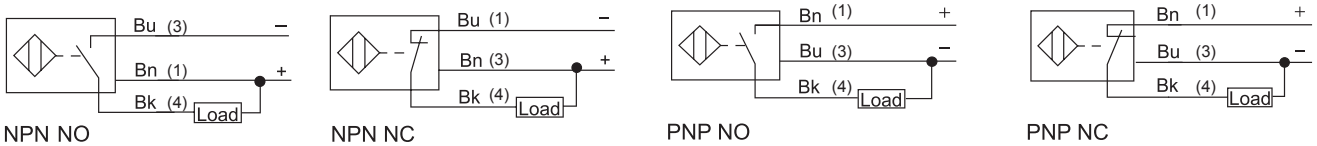

UNOPAL PRIVATE LIMITED
8, UBI ROAD 2, #06-20, ZERVEX
SINGAPORE 408538

TEL: +65-6747 0083
FAX: +65-6747 6041

EMAIL: unopal@singnet.com.sg
WEBSITE: www.unopal.com.sg

Metal Barrel Inductive Sensors G-Sens

Threaded Metal Housing, M18 Series, M12 contact

	Type	Rated Operating Distance Sn	Mounting	Output Function	Output Type	Dimensions
	Fi8-G18-OP6L-Q12	8mm	Flush	N.O.	PNP	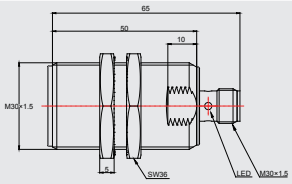
	Fi8-G18-CP6L-Q12	8mm	Flush	N.C.	PNP	
	Fi8-G18-ON6L-Q12	8mm	Flush	N.O.	NPN	
	Fi8-G18-CN6L-Q12	8mm	Flush	N.C.	NPN	
	Ni12-G18-OP6L-Q12	12mm	Non-Flush	N.O.	PNP	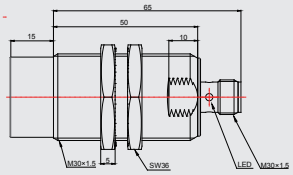
	Ni12-G18-CP6L-Q12	12mm	Non-Flush	N.C.	PNP	
	Ni12-G18-ON6L-Q12	12mm	Non-Flush	N.O.	NPN	
	Ni12-G18-CN6L-Q12	12mm	Non-Flush	N.C.	NPN	
	Ni16-G18-OP6L-Q12	16mm	Non-Flush	N.O.	PNP	
	Ni16-G18-CP6L-Q12	16mm	Non-Flush	N.C.	PNP	
	Ni16-G18-ON6L-Q12	16mm	Non-Flush	N.O.	NPN	
	Ni16-G18-CN6L-Q12	16mm	Non-Flush	N.C.	NPN	

Threaded Metal Housing, M30 Series, M12 contact

	Type	Rated Operating Distance Sn	Mounting	Output Function	Output Type	Dimensions
	Fi15-G30-OP6L-Q12	15mm	Flush	N.O.	PNP	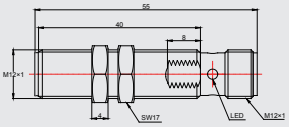
	Fi15-G30-CP6L-Q12	15mm	Flush	N.C.	PNP	
	Fi15-G30-ON6L-Q12	15mm	Flush	N.O.	NPN	
	Fi15-G30-CN6L-Q12	15mm	Flush	N.C.	NPN	
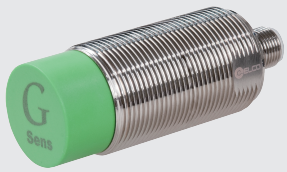	Ni22-G30-OP6L-Q12	22mm	Non-Flush	N.O.	PNP	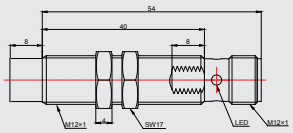
	Ni22-G30-CP6L-Q12	22mm	Non-Flush	N.C.	PNP	
	Ni22-G30-ON6L-Q12	22mm	Non-Flush	N.O.	NPN	
	Ni22-G30-CN6L-Q12	22mm	Non-Flush	N.C.	NPN	
	Ni30-G30-OP6L-Q12	30mm	Non-Flush	N.O.	PNP	
	Ni30-G30-CP6L-Q12	30mm	Non-Flush	N.C.	PNP	
	Ni30-G30-ON6L-Q12	30mm	Non-Flush	N.O.	NPN	
	Ni30-G30-CN6L-Q12	30mm	Non-Flush	N.C.	NPN	

Approvals
Certificates

CE

This edition replaces all previous issues. Availability, errors and specification subject to change without notice.

UNOPAL PRIVATE LIMITED
8, UBI ROAD 2, #06-20, ZERVEX
SINGAPORE 408538

TEL: +65-6747 0083
FAX: +65-6747 6041

EMAIL: unopal@singnet.com.sg
WEBSITE: www.unopal.com.sg

Metal Barrel Inductive Sensors G-Sens

G-Sens metal barrel inductive sensor, with threaded body for general use and enhanced design of back cover, which improve both its utility and protection grade. Increased sensing distance, wide applicable temperature of -30-85℃, high protection grade of IP68, those all contribute to its wide application range. Except for using in conventional industries, G-Sens is specific for kinds of harsh environments.

Threaded Metal Housing, M8 Series, 2m PVC

	Type	Rated Operating Distance Sn	Mounting	Output Function	Output Type	Dimensions
	Fi2-G08-OP6L	2mm	Flush	N.O.	PNP	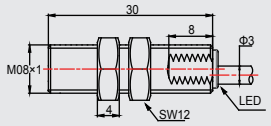
	Fi2-G08-CP6L	2mm	Flush	N.C.	PNP	
	Fi2-G08-ON6L	2mm	Flush	N.O.	NPN	
	Fi2-G08-CN6L	2mm	Flush	N.C.	NPN	
	Ni4-G08-OP6L	4mm	Non-Flush	N.O.	PNP	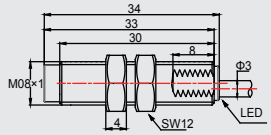
	Ni4-G08-CP6L	4mm	Non-Flush	N.C.	PNP	
	Ni4-G08-ON6L	4mm	Non-Flush	N.O.	NPN	
	Ni4-G08-CN6L	4mm	Non-Flush	N.C.	NPN	

Threaded Metal Housing, M12 Series, 2m PVC

	Type	Rated Operating Distance Sn	Mounting	Output Function	Output Type	Dimensions
	Fi4-G12-OP6L	4mm	Flush	N.O.	PNP	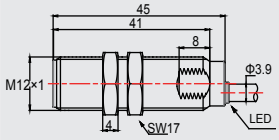
	Fi4-G12-CP6L	4mm	Flush	N.C.	PNP	
	Fi4-G12-ON6L	4mm	Flush	N.O.	NPN	
	Fi4-G12-CN6L	4mm	Flush	N.C.	NPN	
	Ni6-G12-OP6L	6mm	Non-Flush	N.O.	PNP	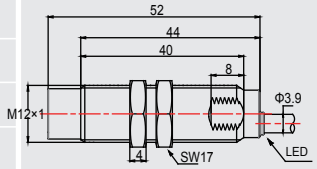
	Ni6-G12-CP6L	6mm	Non-Flush	N.C.	PNP	
	Ni6-G12-ON6L	6mm	Non-Flush	N.O.	NPN	
	Ni6-G12-CN6L	6mm	Non-Flush	N.C.	NPN	
	Ni8-G12-OP6L	8mm	Non-Flush	N.O.	PNP	
	Ni8-G12-CP6L	8mm	Non-Flush	N.C.	PNP	
	Ni8-G12-ON6L	8mm	Non-Flush	N.O.	NPN	
	Ni8-G12-CN6L	8mm	Non-Flush	N.C.	NPN	

Wiring Diagram

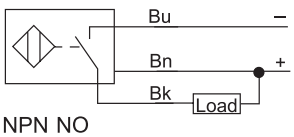

NPN NO

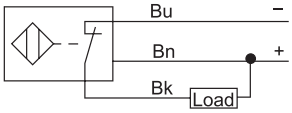

NPN NC

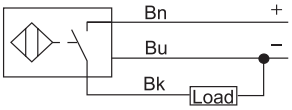

PNP NO

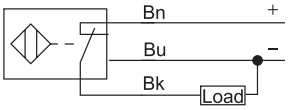

PNP NC

UNOPAL PRIVATE LIMITED
8, UBI ROAD 2, #06-20, ZERVEX
SINGAPORE 408538

TEL: +65-6747 0083
FAX: +65-6747 6041

EMAIL: unopal@singnet.com.sg
WEBSITE: www.unopal.com.sg

Metal Barrel Inductive Sensors G-Sens

Threaded Metal Housing, M18 Series, 2m PVC

	Type	Rated Operating Distance Sn	Mounting	Output Function	Output Type	Dimensions
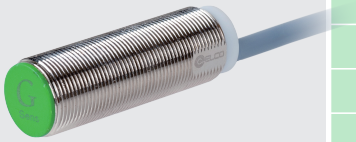	Fi8-G18-OP6L	8mm	Flush	N.O.	PNP	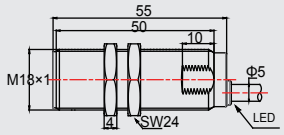
	Fi8-G18-CP6L	8mm	Flush	N.C.	PNP	
	Fi8-G18-ON6L	8mm	Flush	N.O.	NPN	
	Fi8-G18-CN6L	8mm	Flush	N.C.	NPN	
	Ni12-G18-OP6L	12mm	Non-Flush	N.O.	PNP	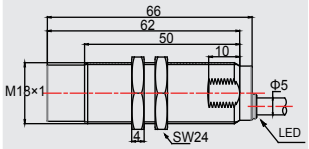
	Ni12-G18-CP6L	12mm	Non-Flush	N.C.	PNP	
	Ni12-G18-ON6L	12mm	Non-Flush	N.O.	NPN	
	Ni12-G18-CN6L	12mm	Non-Flush	N.C.	NPN	
	Ni16-G18-OP6L	16mm	Non-Flush	N.O.	PNP	
	Ni16-G18-CP6L	16mm	Non-Flush	N.C.	PNP	
	Ni16-G18-ON6L	16mm	Non-Flush	N.O.	NPN	
	Ni16-G18-CN6L	16mm	Non-Flush	N.C.	NPN	

Threaded Metal Housing, M30 Series, 2m PVC

	Type	Rated Operating Distance Sn	Mounting	Output Function	Output Type	Dimensions
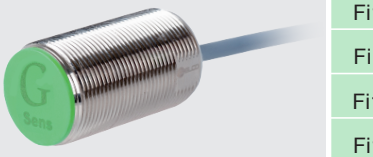	Fi15-G30-OP6L	15mm	Flush	N.O.	PNP	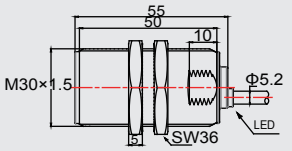
	Fi15-G30-CP6L	15mm	Flush	N.C.	PNP	
	Fi15-G30-ON6L	15mm	Flush	N.O.	NPN	
	Fi15-G30-CN6L	15mm	Flush	N.C.	NPN	
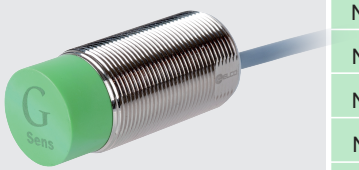	Ni22-G30-OP6L	22mm	Non-Flush	N.O.	PNP	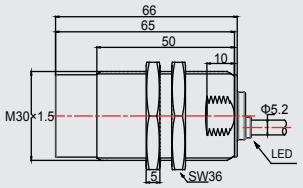
	Ni22-G30-CP6L	22mm	Non-Flush	N.C.	PNP	
	Ni22-G30-ON6L	22mm	Non-Flush	N.O.	NPN	
	Ni22-G30-CN6L	22mm	Non-Flush	N.C.	NPN	
	Ni30-G30-OP6L	30mm	Non-Flush	N.O.	PNP	
	Ni30-G30-CP6L	30mm	Non-Flush	N.C.	PNP	
	Ni30-G30-ON6L	30mm	Non-Flush	N.O.	NPN	
	Ni30-G30-CN6L	30mm	Non-Flush	N.C.	NPN	

Approvals Certificates

CE

This edition replaces all previous issues. Availability, errors and specification subject to change without notice.

UNOPAL PRIVATE LIMITED
8, UBI ROAD 2, #06-20, ZERVEX
SINGAPORE 408538

TEL: +65-6747 0083
FAX: +65-6747 6041

EMAIL: unopal@singnet.com.sg
WEBSITE: www.unopal.com.sg

Metal Barrel-H3/H4

General Data

- Stainless steel housing
- Smooth barrel ø 3/4mm
- DC 3-wire
- High switching frequency
- Precise positioning
- Function display LED
- Degree of protection IP67

Technical Data

Type	Rated operating distance S_n	Mounting	Output function	Output type	Voltage-range U_B	Rated current	Switching frequency	Ambient temperature	Connection	Mechanical Drawing
Fi0.8-KH03-OP6L	0,8mm	flush	NO	PNP	10…30VDC	≤100mA	2500Hz	-25…70°C	2m cable	1
Fi0.8-KH03-ON6L	0,8mm	flush	NO	NPN	10…30VDC	≤100mA	2500Hz	-25…70°C	2m cable	1
Fi0.8-KH03-CP6L	0,8mm	flush	NC	PNP	10…30VDC	≤100mA	2500Hz	-25…70°C	2m cable	1
Fi0.8-KH03-CN6L	0,8mm	flush	NC	NPN	10…30VDC	≤100mA	2500Hz	-25…70°C	2m cable	1
Fi1-KH04-OP6L	1mm	flush	NO	PNP	10…30VDC	≤100mA	2500Hz	-25…70°C	2m cable	2
Fi1-KH04-ON6L	1mm	flush	NO	NPN	10…30VDC	≤100mA	2500Hz	-25…70°C	2m cable	2
Fi1-KH04-CP6L	1mm	flush	NC	PNP	10…30VDC	≤100mA	2500Hz	-25…70°C	2m cable	2
Fi1-KH04-CN6L	1mm	flush	NC	NPN	10…30VDC	≤100mA	2500Hz	-25…70°C	2m cable	2

Connection Diagram

Bu = blue; Bn = brown; Bk = black; Wh = white; (1-4) = Connector pin M8

Cable

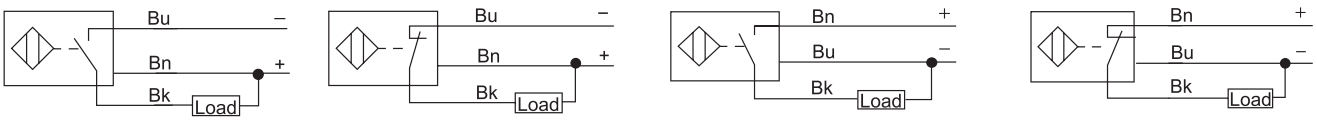

NPN NO NPN NC PNP NO PNP NC

Mechanical Drawing

Drawing 1

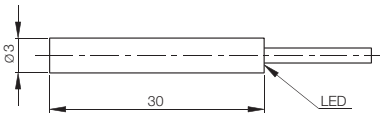

Drawing 2

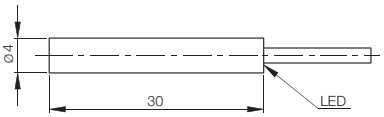

Approvals Certificates

CE

This edition replaces all previous issues. Availability, errors and specification subject to change without notice.

UNOPAL PRIVATE LIMITED
8, UBI ROAD 2, #06-20, ZERVEX
SINGAPORE 408538

TEL: +65-6747 0083
FAX: +65-6747 6041

EMAIL: unopal@singnet.com.sg
WEBSITE: www.unopal.com.sg

Metal Barrel-H6.5 Short Version

General Data

- Stainless steel housing
- Smooth barrel ø 6,5 mm
- DC 2-wire
- Function display LED
- Degree of protection IP67
- Flush/non flush mounting
- High switching frequency
- Compact size

Technical Data

Type	Rated operating distance S_n	Mounting	Output function	Output type	Voltage-range U_B	Rated current	Switching frequency	Ambient temperature	Connection	Mechanical Drawing
Fi1.5-KH6.5S-OD6L	1,5 mm	flush	NO	DC	10…30 VDC	≤100 mA	1000 Hz	-25…70 °C	2 m cable	1
Fi1.5-KH6.5S-CD6L	1,5 mm	flush	NC	DC	10…30 VDC	≤100 mA	1000 Hz	-25…70 °C	2 m cable	1
Ni2-KH6.5S-OD6L	2 mm	non flush	NO	DC	10…30 VDC	≤100 mA	800 Hz	-25…70 °C	2 m cable	2
Ni2-KH6.5S-CD6L	2 mm	non flush	NC	DC	10…30 VDC	≤100 mA	800 Hz	-25…70 °C	2 m cable	2
Fi1.5-KH6.5S-OD6L-Q8	1,5 mm	flush	NO	DC	10…30 VDC	≤100 mA	1000 Hz	-25…70 °C	Connector M8	3
Fi1.5-KH6.5S-CD6L-Q8	1,5 mm	flush	NC	DC	10…30 VDC	≤100 mA	1000 Hz	-25…70 °C	Connector M8	3
Ni2-KH6.5S-OD6L-Q8	2 mm	non flush	NO	DC	10…30 VDC	≤100 mA	800 Hz	-25…70 °C	Connector M8	4
Ni2-KH6.5S-CD6L-Q8	2 mm	non flush	NC	DC	10…30 VDC	≤100 mA	800 Hz	-25…70 °C	Connector M8	4

Connection Diagram

Bu = blue; Bn = brown; Bk = black; Wh = white; (1-4) = Connector pin M8

Cable

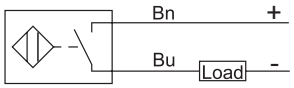

DC-2 wire NO

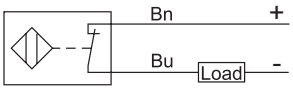

DC-2 wire NC

Connector

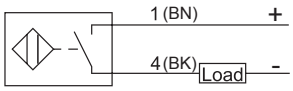

DC-2 wire NO

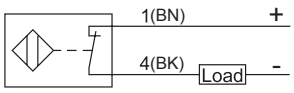

DC-2 wire NC

Mechanical Drawing

Drawing 1

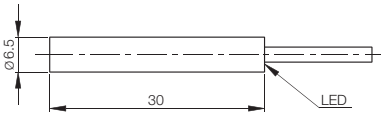

Drawing 2

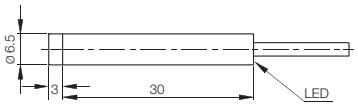

Drawing 3

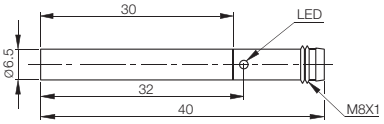

Drawing 4

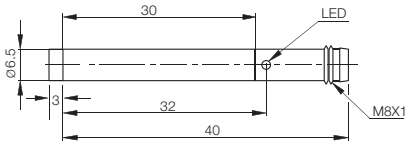

Approvals
Certificates

CE

This edition replaces all previous issues. Availability, errors and specification subject to change without notice.

UNOPAL PRIVATE LIMITED
8, UBI ROAD 2, #06-20, ZERVEX
SINGAPORE 408538

TEL: +65-6747 0083
FAX: +65-6747 6041

EMAIL: unopal@singnet.com.sg
WEBSITE: www.unopal.com.sg

Metal Barrel-H6.5 Short Version

General Data

- Stainless steel housing
- Smooth barrel ø 6,5mm
- DC 3-wire
- Function display LED
- Degree of protection IP67
- Flush/non flush mounting
- High switching frequency
- Compact size

Technical Data

Type	Rated operating distance S_n	Mounting	Output function	Output type	Voltage-range U_B	Rated current	Switching frequency	Ambient temperature	Connection	Mechanical Drawing
Fi1.5-KH6.5S-OP6L	1,5mm	flush	NO	PNP	10…30VDC	≤150mA	2000Hz	-25…70°C	2m cable	1
Fi1.5-KH6.5S-ON6L	1,5mm	flush	NO	NPN	10…30VDC	≤150mA	2000Hz	-25…70°C	2m cable	1
Fi1.5-KH6.5S-CP6L	1,5mm	flush	NC	PNP	10…30VDC	≤150mA	2000Hz	-25…70°C	2m cable	1
Fi1.5-KH6.5S-CN6L	1,5mm	flush	NC	NPN	10…30VDC	≤150mA	2000Hz	-25…70°C	2m cable	1
Ni2-KH6.5S-OP6L	2mm	non flush	NO	PNP	10…30VDC	≤150mA	1500Hz	-25…70°C	2m cable	2
Ni2-KH6.5S-ON6L	2mm	non flush	NO	NPN	10…30VDC	≤150mA	1500Hz	-25…70°C	2m cable	2
Ni2-KH6.5S-CP6L	2mm	non flush	NC	PNP	10…30VDC	≤150mA	1500Hz	-25…70°C	2m cable	2
Ni2-KH6.5S-CN6L	2mm	non flush	NC	NPN	10…30VDC	≤150mA	1500Hz	-25…70°C	2m cable	2
Fi1.5-KH6.5S-OP6L-Q8	1,5mm	flush	NO	PNP	10…30VDC	≤150mA	2000Hz	-25…70°C	Connector M8	3
Fi1.5-KH6.5S-ON6L-Q8	1,5mm	flush	NO	NPN	10…30VDC	≤150mA	2000Hz	-25…70°C	Connector M8	3
Fi1.5-KH6.5S-CP6L-Q8	1,5mm	flush	NC	PNP	10…30VDC	≤150mA	2000Hz	-25…70°C	Connector M8	3
Fi1.5-KH6.5S-CN6L-Q8	1,5mm	flush	NC	NPN	10…30VDC	≤150mA	2000Hz	-25…70°C	Connector M8	3
Ni2-KH6.5S-OP6L-Q8	2mm	non flush	NO	PNP	10…30VDC	≤150mA	1500Hz	-25…70°C	Connector M8	4
Ni2-KH6.5S-ON6L-Q8	2mm	non flush	NO	NPN	10…30VDC	≤150mA	1500Hz	-25…70°C	Connector M8	4
Ni2-KH6.5S-CP6L-Q8	2mm	non flush	NC	PNP	10…30VDC	≤150mA	1500Hz	-25…70°C	Connector M8	4
Ni2-KH6.5S-CN6L-Q8	2mm	non flush	NC	NPN	10…30VDC	≤150mA	1500Hz	-25…70°C	Connector M8	4

Connection Diagram

Bu = blue; Bn = brown; Bk = black; Wh = white; (1-4) = Connector pin M8

Cable

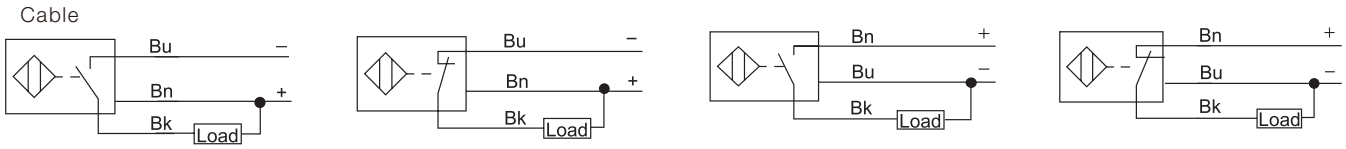

NPN NO NPN NC PNP NO PNP NC

Connector

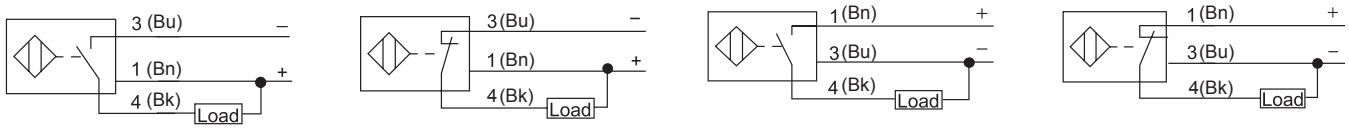

NPN NO NPN NC PNP NO PNP NC

Mechanical Drawing

Drawing 1

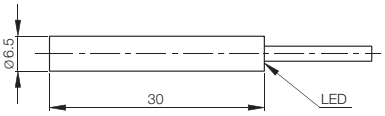

Drawing 2

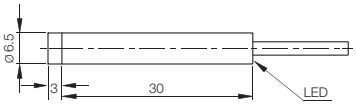

Drawing 3

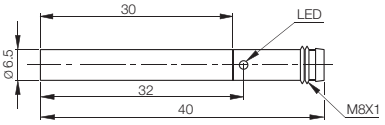

Drawing 4

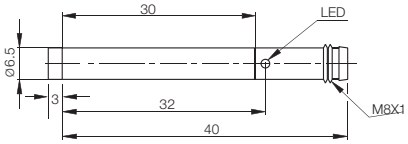

Approvals Certificates

CE

This edition replaces all previous issues. Availability, errors and specification subject to change without notice.

UNOPAL PRIVATE LIMITED
8, UBI ROAD 2, #06-20, ZERVEX
SINGAPORE 408538

TEL: +65-6747 0083
FAX: +65-6747 6041

EMAIL: unopal@singnet.com.sg
WEBSITE: www.unopal.com.sg

Metal Barrel-H6.5

General Data

- Stainless steel housing
- Smooth barrel ø 6,5 mm
- DC 3-wire
- Function display LED
- Degree of protection IP67
- Flush/non flush mounting
- High switching frequency

Technical Data

Type	Rated operating distance S_n	Mounting	Output function	Output type	Voltage-range U_B	Rated current	Switching frequency	Ambient temperature	Connection	Mechanical Drawing
Fi1.5-KH6.5-OP6L	1,5 mm	flush	NO	PNP	10…30 VDC	≤150 mA	2000 Hz	-25…70 °C	2 m cable	1
Fi1.5-KH6.5-ON6L	1,5 mm	flush	NO	NPN	10…30 VDC	≤150 mA	2000 Hz	-25…70 °C	2 m cable	1
Fi1.5-KH6.5-CP6L	1,5 mm	flush	NC	PNP	10…30 VDC	≤150 mA	2000 Hz	-25…70 °C	2 m cable	1
Fi1.5-KH6.5-CN6L	1,5 mm	flush	NC	NPN	10…30 VDC	≤150 mA	2000 Hz	-25…70 °C	2 m cable	1
Ni2-KH6.5-OP6L	2 mm	non flush	NO	PNP	10…30 VDC	≤150 mA	1500 Hz	-25…70 °C	2 m cable	2
Ni2-KH6.5-ON6L	2 mm	non flush	NO	NPN	10…30 VDC	≤150 mA	1500 Hz	-25…70 °C	2 m cable	2
Ni2-KH6.5-CP6L	2 mm	non flush	NC	PNP	10…30 VDC	≤150 mA	1500 Hz	-25…70 °C	2 m cable	2
Ni2-KH6.5-CN6L	2 mm	non flush	NC	NPN	10…30 VDC	≤150 mA	1500 Hz	-25…70 °C	2 m cable	2
Fi1.5-KH6.5-OP6L-Q8	1,5 mm	flush	NO	PNP	10…30 VDC	≤150 mA	2000 Hz	-25…70 °C	Connector M8	3
Fi1.5-KH6.5-ON6L-Q8	1,5 mm	flush	NO	NPN	10…30 VDC	≤150 mA	2000 Hz	-25…70 °C	Connector M8	3
Fi1.5-KH6.5-CP6L-Q8	1,5 mm	flush	NC	PNP	10…30 VDC	≤150 mA	2000 Hz	-25…70 °C	Connector M8	3
Fi1.5-KH6.5-CN6L-Q8	1,5 mm	flush	NC	NPN	10…30 VDC	≤150 mA	2000 Hz	-25…70 °C	Connector M8	3
Ni2-KH6.5-OP6L-Q8	2 mm	non flush	NO	PNP	10…30 VDC	≤150 mA	1500 Hz	-25…70 °C	Connector M8	4
Ni2-KH6.5-ON6L-Q8	2 mm	non flush	NO	NPN	10…30 VDC	≤150 mA	1500 Hz	-25…70 °C	Connector M8	4
Ni2-KH6.5-CP6L-Q8	2 mm	non flush	NC	PNP	10…30 VDC	≤150 mA	1500 Hz	-25…70 °C	Connector M8	4
Ni2-KH6.5-CN6L-Q8	2 mm	non flush	NC	NPN	10…30 VDC	≤150 mA	1500 Hz	-25…70 °C	Connector M8	4

Connection Diagram

Bu = blue; Bn = brown; Bk = black; Wh = white; (1-4) = Connector pin M8

Cable

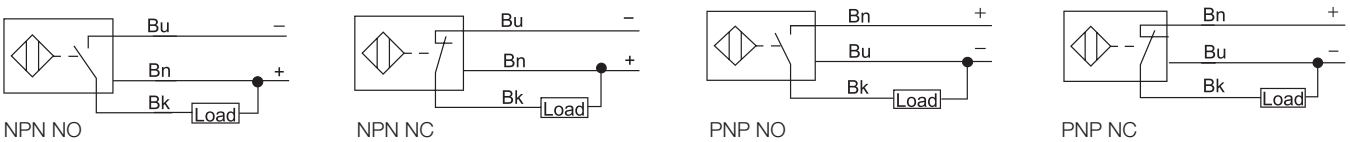

NPN NO | NPN NC | PNP NO | PNP NC

Connector

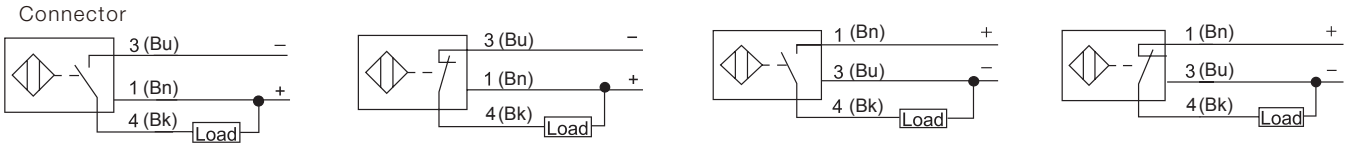

NPN NO | NPN NC | PNP NO | PNP NC

Mechanical Drawing

Drawing 1

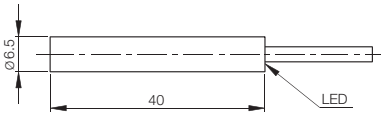

Drawing 2

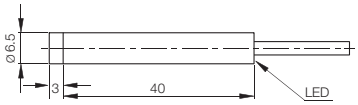

Drawing 3

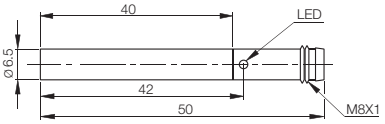

Drawing 4

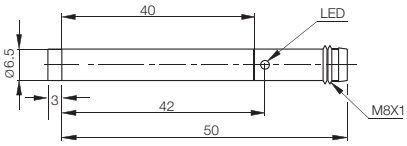

Approvals Certificates

CE

This edition replaces all previous issues. Availability, errors and specification subject to change without notice.

UNOPAL PRIVATE LIMITED
8, UBI ROAD 2, #06-20, ZERVEX
SINGAPORE 408538

TEL: +65-6747 0083
FAX: +65-6747 6041

EMAIL: unopal@singnet.com.sg
WEBSITE: www.unopal.com.sg

Metal Barrel-H6.5 Long Version

General Data

- Stainless steel housing
- Smooth barrel ø 6,5mm
- DC 3-wire
- Function display LED
- Degree of protection IP67
- Flush/non flush mounting
- High switching frequency
- Long version

Technical Data

Type	Rated operating distance S_n	Mounting	Output function	Output type	Voltage-range U_B	Rated current	Switching frequency	Ambient temperature	Connection	Mechanical Drawing
Fi1.5-KH6.5E-OP6L	1,5mm	flush	NO	PNP	10…30VDC	≤150mA	2000Hz	-25…70°C	2m cable	1
Fi1.5-KH6.5E-ON6L	1,5mm	flush	NO	NPN	10…30VDC	≤150mA	2000Hz	-25…70°C	2m cable	1
Fi1.5-KH6.5E-CP6L	1,5mm	flush	NC	PNP	10…30VDC	≤150mA	2000Hz	-25…70°C	2m cable	1
Fi1.5-KH6.5E-CN6L	1,5mm	flush	NC	NPN	10…30VDC	≤150mA	2000Hz	-25…70°C	2m cable	1
Ni2-KH6.5E-OP6L	2mm	non flush	NO	PNP	10…30VDC	≤150mA	1500Hz	-25…70°C	2m cable	2
Ni2-KH6.5E-ON6L	2mm	non flush	NO	NPN	10…30VDC	≤150mA	1500Hz	-25…70°C	2m cable	2
Ni2-KH6.5E-CP6L	2mm	non flush	NC	PNP	10…30VDC	≤150mA	1500Hz	-25…70°C	2m cable	2
Ni2-KH6.5E-CN6L	2mm	non flush	NC	NPN	10…30VDC	≤150mA	1500Hz	-25…70°C	2m cable	2
Fi1.5-KH6.5E-OP6L-Q8	1,5mm	flush	NO	PNP	10…30VDC	≤150mA	2000Hz	-25…70°C	Connector M8	3
Fi1.5-KH6.5E-ON6L-Q8	1,5mm	flush	NO	NPN	10…30VDC	≤150mA	2000Hz	-25…70°C	Connector M8	3
Fi1.5-KH6.5E-CP6L-Q8	1,5mm	flush	NC	PNP	10…30VDC	≤150mA	2000Hz	-25…70°C	Connector M8	3
Fi1.5-KH6.5E-CN6L-Q8	1,5mm	flush	NC	NPN	10…30VDC	≤150mA	2000Hz	-25…70°C	Connector M8	3
Ni2-KH6.5E-OP6L-Q8	2mm	non flush	NO	PNP	10…30VDC	≤150mA	1500Hz	-25…70°C	Connector M8	4
Ni2-KH6.5E-ON6L-Q8	2mm	non flush	NO	NPN	10…30VDC	≤150mA	1500Hz	-25…70°C	Connector M8	4
Ni2-KH6.5E-CP6L-Q8	2mm	non flush	NC	PNP	10…30VDC	≤150mA	1500Hz	-25…70°C	Connector M8	4
Ni2-KH6.5E-CN6L-Q8	2mm	non flush	NC	NPN	10…30VDC	≤150mA	1500Hz	-25…70°C	Connector M8	4

Connection Diagram

Bu = blue; Bn = brown; Bk = black; Wh = white; (1-4) = Connector pin M8

Cable

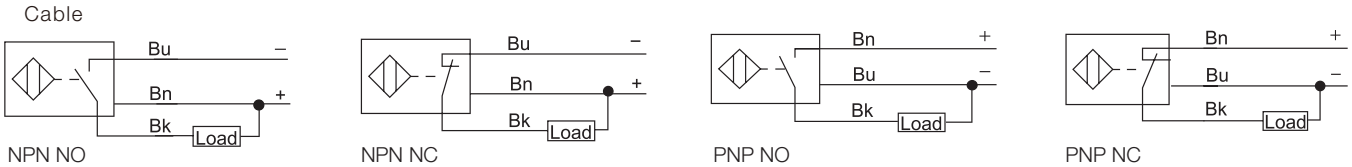

NPN NO | NPN NC | PNP NO | PNP NC

Connector

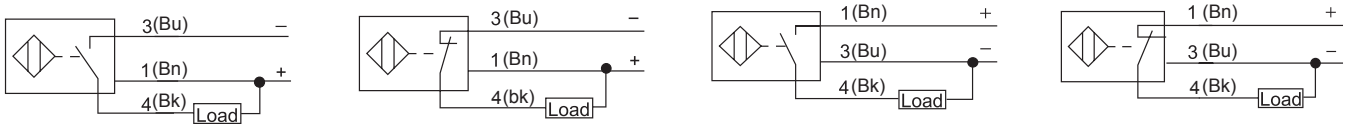

NPN NO | NPN NC | PNP NO | PNP NC

Mechanical Drawing

Drawing 1

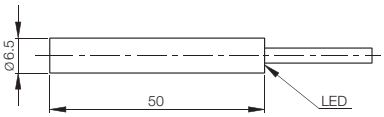

Drawing 2

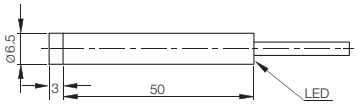

Drawing 3

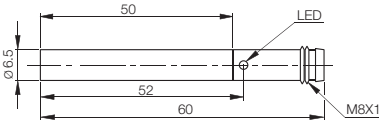

Drawing 4

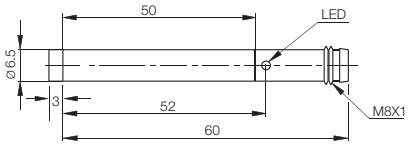

Approvals Certificates

CE

This edition replaces all previous issues. Availability, errors and specification subject to change without notice.

UNOPAL PRIVATE LIMITED
8, UBI ROAD 2, #06-20, ZERVEX
SINGAPORE 408538

TEL: +65-6747 0083
FAX: +65-6747 6041

EMAIL: unopal@singnet.com.sg
WEBSITE: www.unopal.com.sg

Metal Barrel-H8SS

General Data

- Stainless steel housing
- Smooth barrel ø 8mm
- DC 2-wire
- Function display LED
- Degree of protection IP67
- Flush/non flush mounting
- High switching frequency
- Compact size

Technical Data

Type	Rated operating distance S_n	Mounting	Output function	Output type	Voltage-range U_B	Rated current	Switching frequency	Ambient temperature	Connection	Mechanical Drawing
Fi2-KH08SS-OP6L	2mm	flush	NO	PNP	10…30VDC	≤100mA	2000Hz	-25…70°C	2m cable	1
Fi2-KH08SS-ON6L	2mm	flush	NC	NPN	10…30VDC	≤100mA	2000Hz	-25…70°C	2m cable	1
Fi2-KH08SS-CP6L	2mm	flush	NO	PNP	10…30VDC	≤100mA	2000Hz	-25…70°C	2m cable	1
Fi2-KH08SS-CN6L	2mm	flush	NC	NPN	10…30VDC	≤100mA	2000Hz	-25…70°C	2m cable	1

Connection Diagram

Bu = blue; Bn = brown; Bk = black; Wh = white; (1-4) = Connector pin M8

Cable

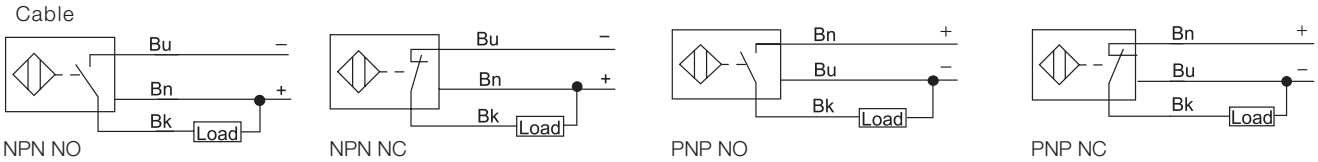

Mechanical Drawing

Drawing 1

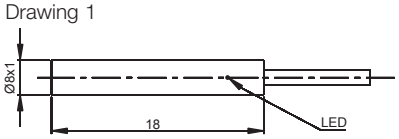

Approvals
Certificates

CE

This edition replaces all previous issues. Availability, errors and specification subject to change without notice.

UNOPAL PRIVATE LIMITED
8, UBI ROAD 2, #06-20, ZERVEX
SINGAPORE 408538

TEL: +65-6747 0083
FAX: +65-6747 6041

EMAIL: unopal@singnet.com.sg
WEBSITE: www.unopal.com.sg

Metal Barrel-M4/M5

General Data

- Stainless steel housing
- Threaded barrel M4/5x0,5
- DC 3-wire
- Function display LED
- Degree of protection IP67
- High switching frequency
- Precise positioning

Technical Data

Type	Rated operating distance S_n	Mounting	Output function	Output type	Voltage-range U_B	Rated current	Switching frequency	Ambient temperature	Connection	Mechanical Drawing
Fi0.8-KM04-OP6L	0,8mm	flush	NO	PNP	10…30VDC	≤100mA	2500Hz	-25…70°C	2m cable	1
Fi0.8-KM04-ON6L	0,8mm	flush	NO	NPN	10…30VDC	≤100mA	2500Hz	-25…70°C	2m cable	1
Fi0.8-KM04-CP6L	0,8mm	flush	NC	PNP	10…30VDC	≤100mA	2500Hz	-25…70°C	2m cable	1
Fi0.8-KM04-CN6L	0,8mm	flush	NC	NPN	10…30VDC	≤100mA	2500Hz	-25…70°C	2m cable	1
Fi1-KM05-OP6L	1mm	flush	NO	PNP	10…30VDC	≤100mA	2500Hz	-25…70°C	2m cable	2
Fi1-KM05-ON6L	1mm	flush	NO	NPN	10…30VDC	≤100mA	2500Hz	-25…70°C	2m cable	2
Fi1-KM05-CP6L	1mm	flush	NC	PNP	10…30VDC	≤100mA	2500Hz	-25…70°C	2m cable	2
Fi1-KM05-CN6L	1mm	flush	NC	NPN	10…30VDC	≤100mA	2500Hz	-25…70°C	2m cable	2
Fi1-KM05-OP6L-Q8	1mm	flush	NO	PNP	10…30VDC	≤100mA	2500Hz	-25…70°C	Connector M8	3
Fi1-KM05-ON6L-Q8	1mm	flush	NO	NPN	10…30VDC	≤100mA	2500Hz	-25…70°C	Connector M8	3
Fi1-KM05-CP6L-Q8	1mm	flush	NC	PNP	10…30VDC	≤100mA	2500Hz	-25…70°C	Connector M8	3
Fi1-KM05-CN6L-Q8	1mm	flush	NC	NPN	10…30VDC	≤100mA	2500Hz	-25…70°C	Connector M8	3

Connection Diagram

Bu = blue; Bn = brown; Bk = black; Wh = white; (1-4) = Connector pin M8

Cable

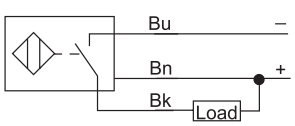

NPN NO

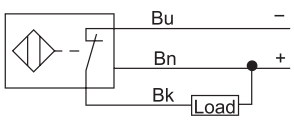

NPN NC

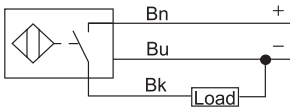

PNP NO

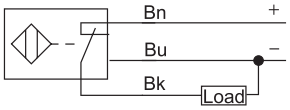

PNP NC

Connector

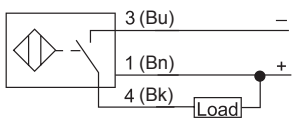

NPN NO

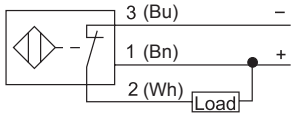

NPN NC

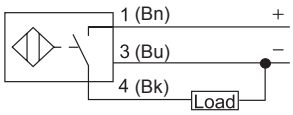

PNP NO

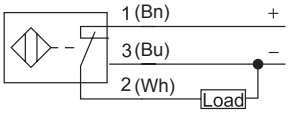

PNP NC

Mechanical Drawing

Drawing 1

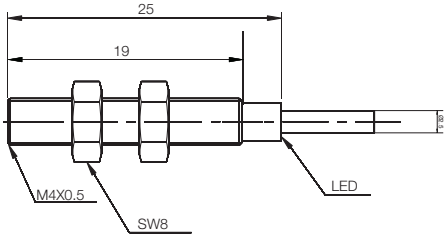

Drawing 2

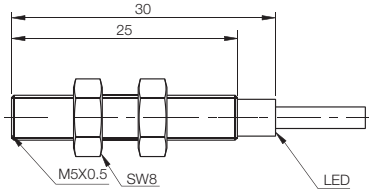

Drawing 3

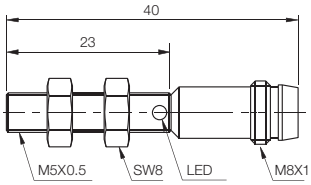

Approvals Certificates

CE

This edition replaces all previous issues. Availability, errors and specification subject to change without notice.

UNOPAL PRIVATE LIMITED
8, UBI ROAD 2, #06-20, ZERVEX
SINGAPORE 408538

TEL: +65-6747 0083
FAX: +65-6747 6041

EMAIL: unopal@singnet.com.sg
WEBSITE: www.unopal.com.sg

Metal Barrel-M8SS

General Data

- Stainless steel housing
- Threaded barrel M8x1
- DC 3-wire
- Function display LED
- Degree of protection IP67
- Flush/non flush mounting
- High switching frequency
- Short version

Technical Data

Type	Rated operating distance S_n	Mounting	Output function	Output type	Voltage-range U_B	Rated current	Switching frequency	Ambient temperature	Connection	Mechanical Drawing
Fi2-KM08SS-OP6L	2mm	flush	NO	PNP	10…30VDC	≤150mA	2000Hz	-25…70°C	2m cable	1
Fi2-KM08SS-ON6L	2mm	flush	NO	NPN	10…30VDC	≤150mA	2000Hz	-25…70°C	2m cable	1
Fi2-KM08SS-CP6L	2mm	flush	NC	PNP	10…30VDC	≤150mA	2000Hz	-25…70°C	2m cable	1
Fi2-KM08SS-CN6L	2mm	flush	NC	NPN	10…30VDC	≤150mA	2000Hz	-25…70°C	2m cable	1

Connection Diagram

Bu = blue; Bn = brown; Bk = black; Wh = white; (1-4) = Connector pin M8

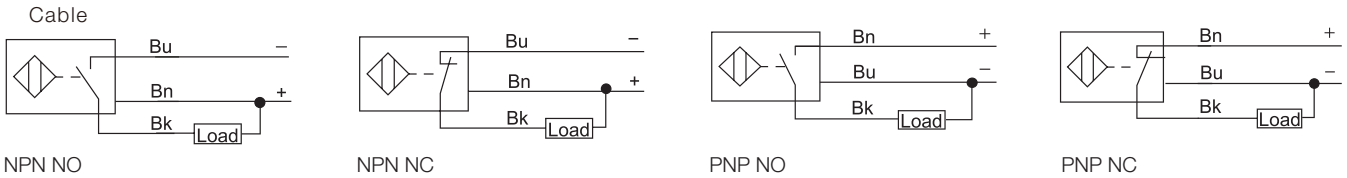

NPN NO NPN NC PNP NO PNP NC

Mechanical Drawing

Drawing 1

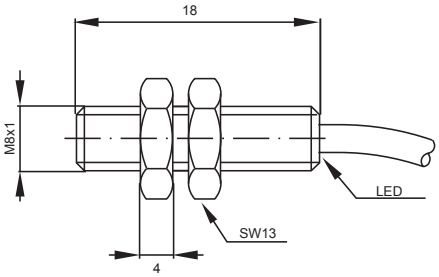

Approvals Certificates

CE

This edition replaces all previous issues. Availability, errors and specification subject to change without notice.

UNOPAL PRIVATE LIMITED
8, UBI ROAD 2, #06-20, ZERVEX
SINGAPORE 408538

TEL: +65-6747 0083
FAX: +65-6747 6041

EMAIL: unopal@singnet.com.sg
WEBSITE: www.unopal.com.sg

Metal Barrel-M12SS

General Data

- Metal housing
- Threaded barrel M12x1
- DC 3-wire
- Function display LED
- Degree of protection IP67
- Standard size
- Extended operating distance
- Varied output function
- Short version

Technical Data

Type	Rated operating distance S_n	Mounting	Output function	Output type	Voltage-range U_B	Rated current	Switching frequency	Ambient temperature	Connection	Mechanical Drawing
Fi2-M12SS-OP6L	2mm	flush	NO	PNP	10…30VDC	≤100mA	800Hz	-25…70°C	2m cable	1
Fi2-M12SS-ON6L	2mm	flush	NO	NPN	10…30VDC	≤100mA	800Hz	-25…70°C	2m cable	1
Fi2-M12SS-CP6L	2mm	flush	NC	PNP	10…30VDC	≤100mA	500Hz	-25…70°C	2m cable	1
Fi2-M12SS-CN6L	2mm	flush	NC	NPN	10…30VDC	≤100mA	500Hz	-25…70°C	2m cable	1

Connection Diagram

Bu = blue; Bn = brown; Bk = black; Wh = white; (1-4) = Connector pin M12

Cable

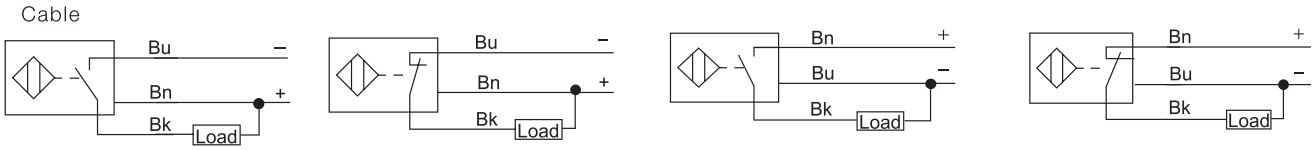

NPN NO | NPN NC | PNP NO | PNP NC

Mechanical Drawing

Drawing 1

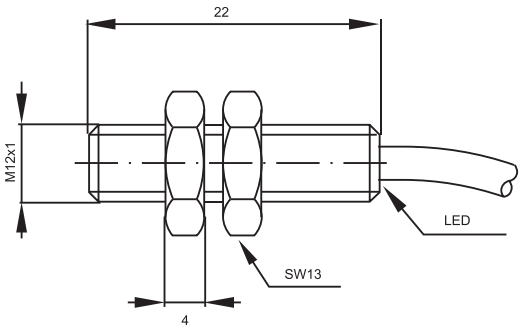

Approvals
Certificates

CE

This edition replaces all previous issues. Availability, errors and specification subject to change without notice.

UNOPAL PRIVATE LIMITED
8, UBI ROAD 2, #06-20, ZERVEX
SINGAPORE 408538

TEL: +65-6747 0083
FAX: +65-6747 6041

EMAIL: unopal@singnet.com.sg
WEBSITE: www.unopal.com.sg

Inductive Sensors

Metal Barrel Inductive Sensors G-Series

Threaded Metal Housing, M8 Series, Protection Degree IP68, LED Indicator

	Type	Rated Operating Distance Sn	Mounting	Output Function	Output Type	Dimensions
	Fi2-G08-OP6L	2mm	Flush	N.O.	PNP	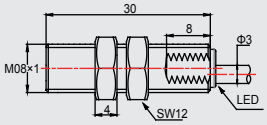
	Fi2-G08-CP6L	2mm	Flush	N.C.	PNP	
	Fi2-G08-ON6L	2mm	Flush	N.O.	NPN	
	Fi2-G08-CN6L	2mm	Flush	N.C.	NPN	
	Ni4-G08-OP6L	4mm	Non-Flush	N.O.	PNP	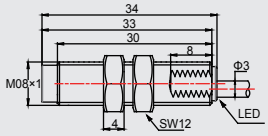
	Ni4-G08-CP6L	4mm	Non-Flush	N.C.	PNP	
	Ni4-G08-ON6L	4mm	Non-Flush	N.O.	NPN	
	Ni4-G08-CN6L	4mm	Non-Flush	N.C.	NPN	

Threaded Metal Housing, M12 Series, Protection Degree IP68, LED Indicator

	Type	Rated Operating Distance Sn	Mounting	Output Function	Output Type	Dimensions
	Fi4-G12-OP6L	4mm	Flush	N.O.	PNP	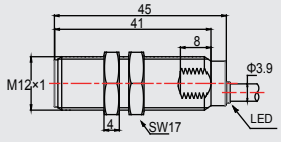
	Fi4-G12-CP6L	4mm	Flush	N.C.	PNP	
	Fi4-G12-ON6L	4mm	Flush	N.O.	NPN	
	Fi4-G12-CN6L	4mm	Flush	N.C.	NPN	
	Ni6-G12-OP6L	6mm	Non-Flush	N.O.	PNP	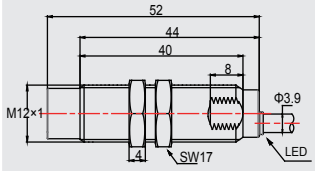
	Ni6-G12-CP6L	6mm	Non-Flush	N.C.	PNP	
	Ni6-G12-ON6L	6mm	Non-Flush	N.O.	NPN	
	Ni6-G12-CN6L	6mm	Non-Flush	N.C.	NPN	
	Ni8-G12-OP6L	8mm	Non-Flush	N.O.	PNP	
	Ni8-G12-CP6L	8mm	Non-Flush	N.C.	PNP	
	Ni8-G12-ON6L	8mm	Non-Flush	N.O.	NPN	
	Ni8-G12-CN6L	8mm	Non-Flush	N.C.	NPN	

Wiring Diagram

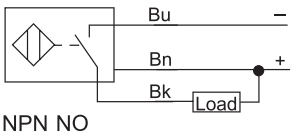

NPN NO

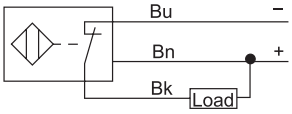

NPN NC

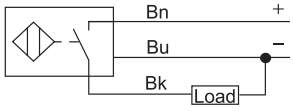

PNP NO

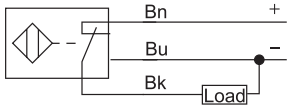

PNP NC

UNOPAL PRIVATE LIMITED
8, UBI ROAD 2, #06-20, ZERVEX
SINGAPORE 408538

TEL: +65-6747 0083
FAX: +65-6747 6041

EMAIL: unopal@singnet.com.sg
WEBSITE: www.unopal.com.sg

Metal Barrel Inductive Sensors G-Series

Threaded Metal Housing, M18 Series, Protection Degree IP68, LED Indicator

	Type	Rated Operating Distance Sn	Mounting	Output Function	Output Type	Dimensions
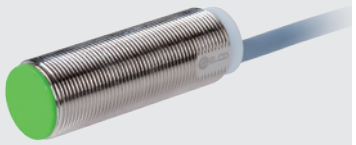	Fi8-G18-OP6L	8mm	Flush	N.O.	PNP	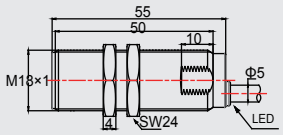
	Fi8-G18-CP6L	8mm	Flush	N.C.	PNP	
	Fi8-G18-ON6L	8mm	Flush	N.O.	NPN	
	Fi8-G18-CN6L	8mm	Flush	N.C.	NPN	
	Ni12-G18-OP6L	12mm	Non-Flush	N.O.	PNP	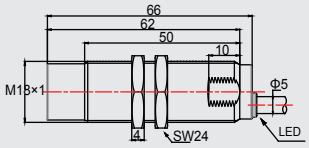
	Ni12-G18-CP6L	12mm	Non-Flush	N.C.	PNP	
	Ni12-G18-ON6L	12mm	Non-Flush	N.O.	NPN	
	Ni12-G18-CN6L	12mm	Non-Flush	N.C.	NPN	
	Ni16-G18-OP6L	16mm	Non-Flush	N.O.	PNP	
	Ni16-G18-CP6L	16mm	Non-Flush	N.C.	PNP	
	Ni16-G18-ON6L	16mm	Non-Flush	N.O.	NPN	
	Ni16-G18-CN6L	16mm	Non-Flush	N.C.	NPN	

Threaded Metal Housing, M30 Series, Protection Degree IP68, LED Indicator

	Type	Rated Operating Distance Sn	Mounting	Output Function	Output Type	Dimensions
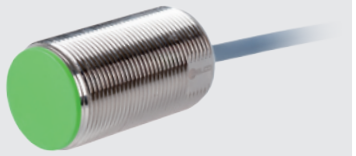	Fi15-G30-OP6L	15mm	Flush	N.O.	PNP	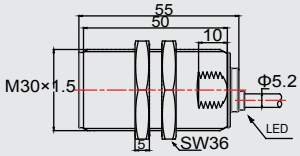
	Fi15-G30-CP6L	15mm	Flush	N.C.	PNP	
	Fi15-G30-ON6L	15mm	Flush	N.O.	NPN	
	Fi15-G30-CN6L	15mm	Flush	N.C.	NPN	
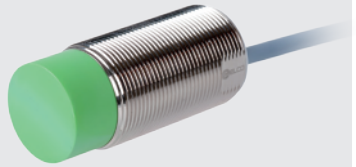	Ni22-G30-OP6L	22mm	Non-Flush	N.O.	PNP	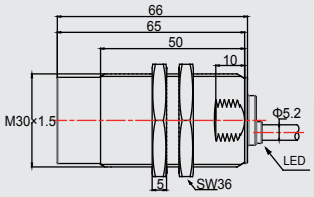
	Ni22-G30-CP6L	22mm	Non-Flush	N.C.	PNP	
	Ni22-G30-ON6L	22mm	Non-Flush	N.O.	NPN	
	Ni22-G30-CN6L	22mm	Non-Flush	N.C.	NPN	
	Ni30-G30-OP6L	30mm	Non-Flush	N.O.	PNP	
	Ni30-G30-CP6L	30mm	Non-Flush	N.C.	PNP	
	Ni30-G30-ON6L	30mm	Non-Flush	N.O.	NPN	
	Ni30-G30-CN6L	30mm	Non-Flush	N.C.	NPN	

UNOPAL PRIVATE LIMITED
8, UBI ROAD 2, #06-20, ZERVEX
SINGAPORE 408538

TEL: +65-6747 0083
FAX: +65-6747 6041

EMAIL: unopal@singnet.com.sg
WEBSITE: www.unopal.com.sg

Metal Barrel-M8

General Data

- Stainless steel housing
- Threaded barrel M8x1
- DC 3-wire
- Function display LED
- Degree of protection IP67
- Flush/non flush mounting
- High switching frequency
- Short version KM08S available

Technical Data

Type	Rated operating distance S_n	Mounting	Output function	Output type	Voltage-range U_B	Rated current	Switching frequency	Ambient temperature	Connection	Mechanical Drawing
Fi2-KM08-OP6L-Q8	2mm	flush	NO	PNP	10…30VDC	≤150mA	2000Hz	-25…70°C	Connector M8	1
Fi2-KM08-ON6L-Q8	2mm	flush	NO	NPN	10…30VDC	≤150mA	2000Hz	-25…70°C	Connector M8	1
Fi2-KM08-CP6L-Q8	2mm	flush	NC	PNP	10…30VDC	≤150mA	2000Hz	-25…70°C	Connector M8	1
Fi2-KM08-CN6L-Q8	2mm	flush	NC	NPN	10…30VDC	≤150mA	2000Hz	-25…70°C	Connector M8	1
Ni3-KM08-OP6L-Q8	3mm	non flush	NO	PNP	10…30VDC	≤150mA	1500Hz	-25…70°C	Connector M8	2
Ni3-KM08-ON6L-Q8	3mm	non flush	NO	NPN	10…30VDC	≤150mA	1500Hz	-25…70°C	Connector M8	2
Ni3-KM08-CP6L-Q8	3mm	non flush	NC	PNP	10…30VDC	≤150mA	1500Hz	-25…70°C	Connector M8	2
Ni3-KM08-CN6L-Q8	3mm	non flush	NC	NPN	10…30VDC	≤150mA	1500Hz	-25…70°C	Connector M8	2

Connection Diagram

Bu = blue; Bn = brown; Bk = black; Wh = white; (1-4) = Connector pin M8

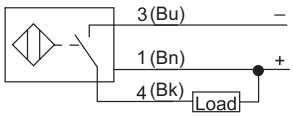

NPN NO

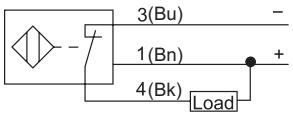

NPN NC

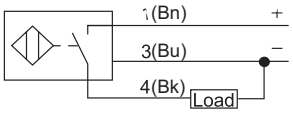

PNP NO

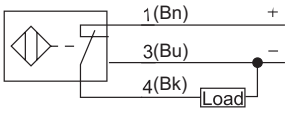

PNP NC

Mechanical Drawing

Drawing 1

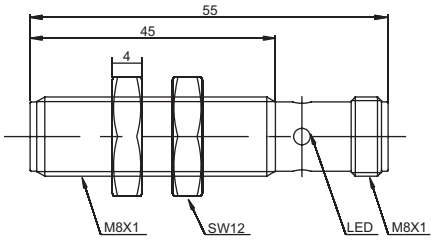

Drawing 2

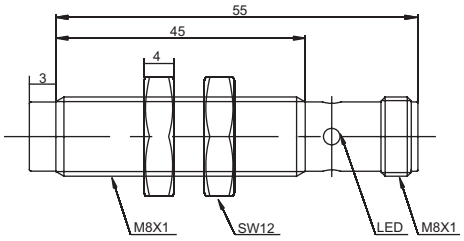

Approvals Certificates

CE

This edition replaces all previous issues. Availability, errors and specification subject to change without notice.

UNOPAL PRIVATE LIMITED
8, UBI ROAD 2, #06-20, ZERVEX
SINGAPORE 408538

TEL: +65-6747 0083
FAX: +65-6747 6041

EMAIL: unopal@singnet.com.sg
WEBSITE: www.unopal.com.sg

Metal Barrel-M8

General Data

- Nickel-plated brass housing, KM optional
- Threaded barrel M8x1
- DC 3-wire
- Function display LED
- Degree of protection IP67
- Flush/non flush mounting
- High switching frequency
- Connector M12 optional
- Short version M08S available

Technical Data

Type	Rated operating distance S_n	Mounting	Output function	Output type	Voltage-range U_B	Rated current	Switching frequency	Ambient temperature	Connection	Mechanical Drawing
Fi2-M08-OP6L	2mm	flush	NO	PNP	10…30VDC	≤150mA	2000Hz	-25…70°C	2m cable	1
Fi2-M08-ON6L	2mm	flush	NO	NPN	10…30VDC	≤150mA	2000Hz	-25…70°C	2m cable	1
Fi2-M08-CP6L	2mm	flush	NC	PNP	10…30VDC	≤150mA	2000Hz	-25…70°C	2m cable	1
Fi2-M08-CN6L	2mm	flush	NC	NPN	10…30VDC	≤150mA	2000Hz	-25…70°C	2m cable	1
Ni3-M08-OP6L	3mm	non flush	NO	PNP	10…30VDC	≤150mA	1500Hz	-25…70°C	2m cable	2
Ni3-M08-ON6L	3mm	non flush	NO	NPN	10…30VDC	≤150mA	1500Hz	-25…70°C	2m cable	2
Ni3-M08-CP6L	3mm	non flush	NC	PNP	10…30VDC	≤150mA	1500Hz	-25…70°C	2m cable	2
Ni3-M08-CN6L	3mm	non flush	NC	NPN	10…30VDC	≤150mA	1500Hz	-25…70°C	2m cable	2
Fi2-M08-OP6L-Q12	2mm	flush	NO	PNP	10…30VDC	≤150mA	2000Hz	-25…70°C	Connector M12	3
Fi2-M08-ON6L-Q12	2mm	flush	NO	NPN	10…30VDC	≤150mA	2000Hz	-25…70°C	Connector M12	3
Fi2-M08-CP6L-Q12	2mm	flush	NC	PNP	10…30VDC	≤150mA	2000Hz	-25…70°C	Connector M12	3
Fi2-M08-CN6L-Q12	2mm	flush	NC	NPN	10…30VDC	≤150mA	2000Hz	-25…70°C	Connector M12	3
Ni3-M08-OP6L-Q12	3mm	non flush	NO	PNP	10…30VDC	≤150mA	1500Hz	-25…70°C	Connector M12	4
Ni3-M08-ON6L-Q12	3mm	non flush	NO	NPN	10…30VDC	≤150mA	1500Hz	-25…70°C	Connector M12	4
Ni3-M08-CP6L-Q12	3mm	non flush	NC	PNP	10…30VDC	≤150mA	1500Hz	-25…70°C	Connector M12	4
Ni3-M08-CN6L-Q12	3mm	non flush	NC	NPN	10…30VDC	≤150mA	1500Hz	-25…70°C	Connector M12	4

Connection Diagram

Bu = blue; Bn = brown; Bk = black; Wh = white; (1-4) = Connector pin M8

Cable

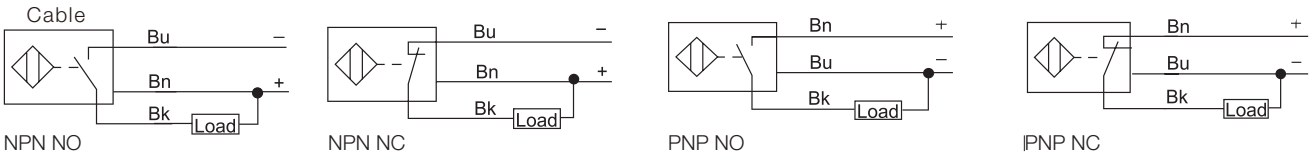

NPN NO NPN NC PNP NO PNP NC

Connector

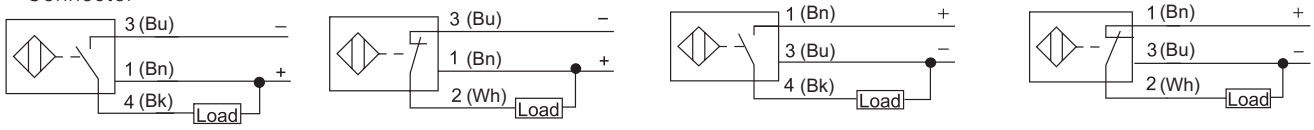

NPN NO NPN NC PNP NO PNP NC

Approvals Certificates

CE

This edition replaces all previous issues. Availability, errors and specification subject to change without notice.

UNOPAL PRIVATE LIMITED
8, UBI ROAD 2, #06-20, ZERVEX
SINGAPORE 408538

TEL: +65-6747 0083
FAX: +65-6747 6041

EMAIL: unopal@singnet.com.sg
WEBSITE: www.unopal.com.sg

Metal Barrel-M8

Mechanical Drawing

Drawing 1

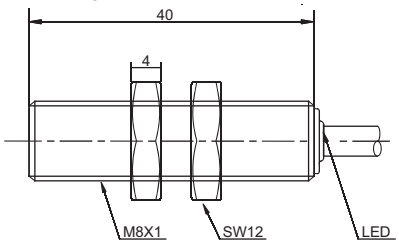

Drawing 2

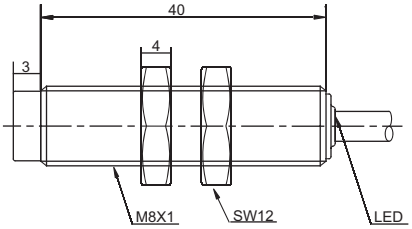

Drawing 3

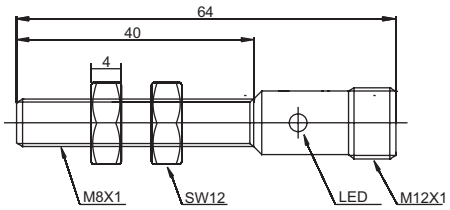

Drawing 4

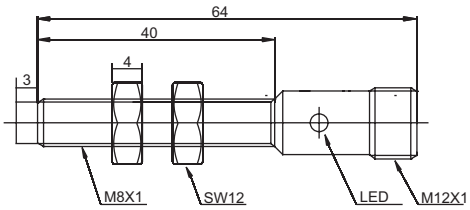

Approvals
Certificates

CE

This edition replaces all previous issues. Availability, errors and specification subject to change without notice.

UNOPAL PRIVATE LIMITED
8, UBI ROAD 2, #06-20, ZERVEX
SINGAPORE 408538

TEL: +65-6747 0083
FAX: +65-6747 6041

EMAIL: unopal@singnet.com.sg
WEBSITE: www.unopal.com.sg

Metal Barrel-M12

General Data

- Metal housing
- Threaded barrel M12x1
- Extended operating distance
- DC 3-wire
- Function display LED
- Degree of protection IP67
- Standard size

Technical Data

Type	Rated operating distance S_n	Mounting	Output function	Output type	Voltage-range U_B	Rated current	Switching frequency	Ambient temperature	Connection	Mechanical Drawing
Ni5-M12-OP6L	5mm	non flush	NO	PNP	10…30VDC	≤200mA	800Hz	-25…70°C	2m cable	M12_21
Ni5-M12-ON6L	5mm	non flush	NO	NPN	10…30VDC	≤200mA	800Hz	-25…70°C	2m cable	M12_21
Ni5-M12-CP6L	5mm	non flush	NC	PNP	10…30VDC	≤200mA	800Hz	-25…70°C	2m cable	M12_21
Ni5-M12-CN6L	5mm	non flush	NC	NPN	10…30VDC	≤200mA	800Hz	-25…70°C	2m cable	M12_21
Ni5-M12-OP6L-Q12	5mm	non flush	NO	PNP	10…30VDC	≤200mA	400Hz	-25…70°C	M12 connector	M12_41
Ni5-M12-ON6L-Q12	5mm	non flush	NO	NPN	10…30VDC	≤200mA	400Hz	-25…70°C	M12 connector	M12_41
Ni5-M12-CP6L-Q12	5mm	non flush	NC	PNP	10…30VDC	≤200mA	400Hz	-25…70°C	M12 connector	M12_41
Ni5-M12-CN6L-Q12	5mm	non flush	NC	NPN	10…30VDC	≤200mA	400Hz	-25…70°C	M12 connector	M12_41

Connection Diagram

Bu = blue; Bn = brown; Bk = black; Wh = white; (1-4) = Connector pin M12

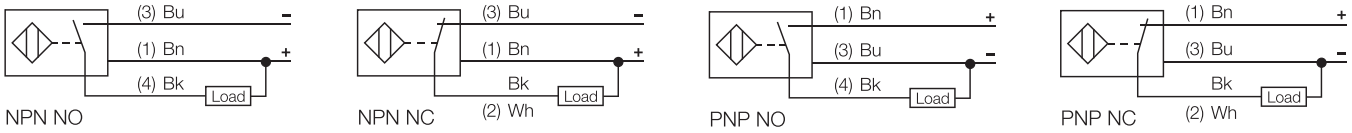

Mechanical Drawing

Drawing M12_21

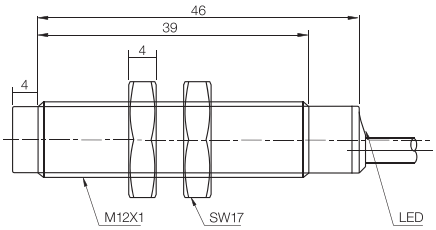

Drawing M12_41

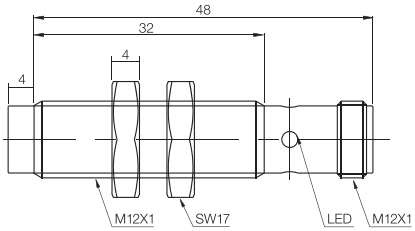

Approvals Certificates

CE

This edition replaces all previous issues. Availability, errors and specification subject to change without notice.

UNOPAL PRIVATE LIMITED
8, UBI ROAD 2, #06-20, ZERVEX
SINGAPORE 408538

TEL: +65-6747 0083
FAX: +65-6747 6041

EMAIL: unopal@singnet.com.sg
WEBSITE: www.unopal.com.sg

Metal Barrel-M12

General Data

- Metal housing
- Threaded barrel M12x1
- AC 2-wire
- Function display LED
- Degree of protection IP67
- Standard size
- Flush/non flush mounting
- Wide voltage range

Technical Data

Type	Rated operating distance S_n	Mounting	Output function	Output type	Voltage-range U_B	Rated current	Switching frequency	Ambient temperature	Connection	Mechanical Drawing
Fi2-M12-OSA3L	2mm	flush	NO	AC	20…250VAC	≤200mA	20Hz	-25…70°C	2m cable	M12_12
Fi2-M12-CSA3L	2mm	flush	NC	AC	20…250VAC	≤200mA	20Hz	-25…70°C	2m cable	M12_12
Ni4-M12-OSA3L	4mm	non flush	NO	AC	20…250VAC	≤200mA	20Hz	-25…70°C	2m cable	M12_23
Ni4-M12-CSA3L	4mm	non flush	NC	AC	20…250VAC	≤200mA	20Hz	-25…70°C	2m cable	M12_23
Fi2-M12-OSA3L-Q12	2mm	flush	NO	AC	20…250VAC	≤200mA	20Hz	-25…70°C	M12 connector	M12_33
Fi2-M12-CSA3L-Q12	2mm	flush	NC	AC	20…250VAC	≤200mA	20Hz	-25…70°C	M12 connector	M12_33
Ni4-M12-OSA3L-Q12	4mm	non flush	NO	AC	20…250VAC	≤200mA	20Hz	-25…70°C	M12 connector	M12_43
Ni4-M12-CSA3L-Q12	4mm	non flush	NC	AC	20…250VAC	≤200mA	20Hz	-25…70°C	M12 connector	M12_43

Connection Diagram

Bu = blue; Bn = brown; Bk = black; Wh = white; (1-4) = Connector pin M12

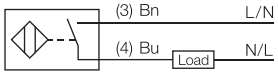

AC-2 wire NO

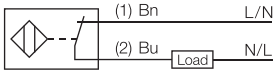

AC-2 wire NC

Mechanical Drawing

Drawing M12_12

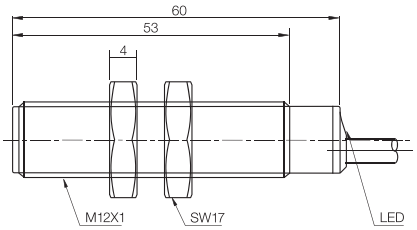

Drawing M12_23

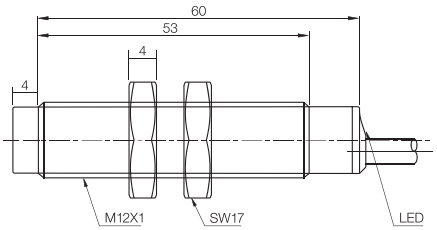

Drawing M12_33

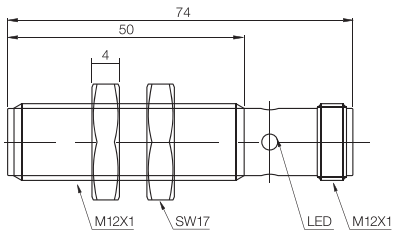

Drawing M12_43

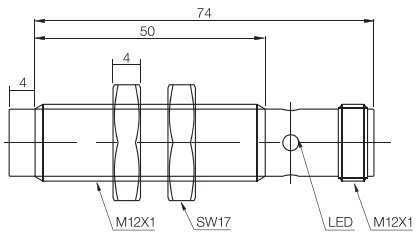

Approvals Certificates

CE

This edition replaces all previous issues. Availability, errors and specification subject to change without notice.

UNOPAL PRIVATE LIMITED
8, UBI ROAD 2, #06-20, ZERVEX
SINGAPORE 408538

TEL: +65-6747 0083
FAX: +65-6747 6041

EMAIL: unopal@singnet.com.sg
WEBSITE: www.unopal.com.sg

Metal Barrel-M18 Short Version

General Data

- Metal housing
- Threaded barrel M18x1
- DC 2-wire
- Function display LED
- Degree of protection IP67
- Flush/non flush mounting

Technical Data

Type	Rated operating distance S_n	Mounting	Output function	Output type	Voltage-range U_B	Rated current	Switching frequency	Ambient temperature	Connection	Mechanical Drawing
Fi5-M18S-OD6L	5mm	flush	NO	DC	10…30VDC	≤100mA	500Hz	-25…70°C	2m cable	M18_11
Fi5-M18S-CD6L	5mm	flush	NC	DC	10…30VDC	≤100mA	500Hz	-25…70°C	2m cable	M18_11
Ni8-M18S-OD6L	8mm	non flush	NO	DC	10…30VDC	≤100mA	300Hz	-25…70°C	2m cable	M18_21
Ni8-M18S-CD6L	8mm	non flush	NC	DC	10…30VDC	≤100mA	300Hz	-25…70°C	2m cable	M18_21
Fi5-M18S-OD6L-Q12	5mm	flush	NO	DC	10…30VDC	≤100mA	500Hz	-25…70°C	M12 connector	M18_31
Fi5-M18S-CD6L-Q12	5mm	flush	NC	DC	10…30VDC	≤100mA	500Hz	-25…70°C	M12 connector	M18_31
Ni8-M18S-OD6L-Q12	8mm	non flush	NO	DC	10…30VDC	≤100mA	300Hz	-25…70°C	M12 connector	M18_41
Ni8-M18S-CD6L-Q12	8mm	non flush	NC	DC	10…30VDC	≤100mA	300Hz	-25…70°C	M12 connector	M18_41

Connection Diagram

Bu = blue; Bn = brown; Bk = black; Wh = white; (1-4) = Connector pin M12

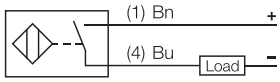

DC-2 wire NO

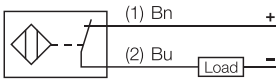

DC-2 wire NC

Mechanical Drawing

Drawing M18_11

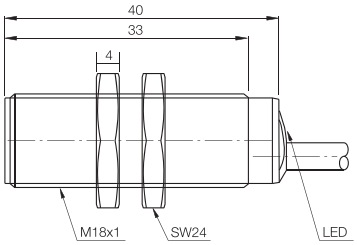

Drawing M18_21

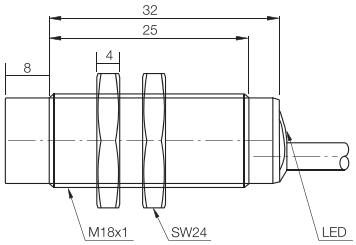

Drawing M18_31

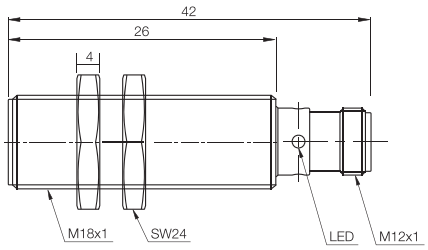

Drawing M18_41

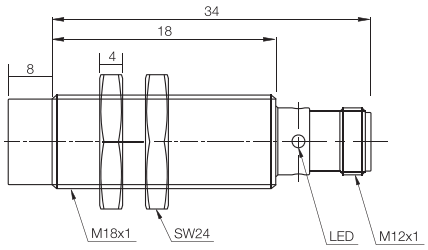

Approvals Certificates

CE

This edition replaces all previous issues. Availability, errors and specification subject to change without notice.

UNOPAL PRIVATE LIMITED
8, UBI ROAD 2, #06-20, ZERVEX
SINGAPORE 408538

TEL: +65-6747 0083
FAX: +65-6747 6041

EMAIL: unopal@singnet.com.sg
WEBSITE: www.unopal.com.sg

Metal Barrel-M18

General Data

- Metal housing
- Threaded barrel M18x1
- DC 2-wire
- Function display LED
- Degree of protection IP67
- Standard size
- Flush/non flush mounting

Technical Data

Type	Rated operating distance S_n	Mounting	Output function	Output type	Voltage-range U_B	Rated current	Switching frequency	Ambient temperature	Connection	Mechanical Drawing
Fi5-M18-OD6L	5mm	flush	NO	DC	10…30VDC	≤100mA	500Hz	-25…70°C	2m cable	M18_12
Fi5-M18-CD6L	5mm	flush	NC	DC	10…30VDC	≤100mA	500Hz	-25…70°C	2m cable	M18_12
Ni8-M18-OD6L	8mm	non flush	NO	DC	10…30VDC	≤100mA	300Hz	-25…70°C	2m cable	M18_22
Ni8-M18-CD6L	8mm	non flush	NC	DC	10…30VDC	≤100mA	300Hz	-25…70°C	2m cable	M18_22
Fi5-M18-OD6L-Q12	5mm	flush	NO	DC	10…30VDC	≤100mA	500Hz	-25…70°C	M12 connector	M18_32
Fi5-M18-CD6L-Q12	5mm	flush	NC	DC	10…30VDC	≤100mA	500Hz	-25…70°C	M12 connector	M18_32
Ni8-M18-OD6L-Q12	8mm	non flush	NO	DC	10…30VDC	≤100mA	300Hz	-25…70°C	M12 connector	M18_42
Ni8-M18-CD6L-Q12	8mm	non flush	NC	DC	10…30VDC	≤100mA	300Hz	-25…70°C	M12 connector	M18_42

Connection Diagram

Bu = blue; Bn = brown; Bk = black; Wh = white; (1-4) = Connector pin M12

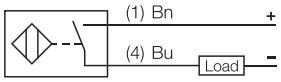

DC-2 wire NO

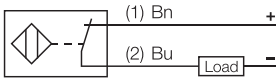

DC-2 wire NC

Mechanical Drawing

Drawing M18_12

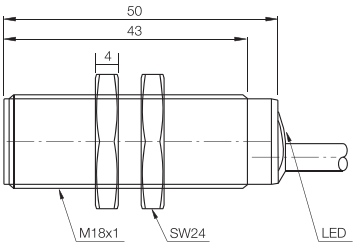

Drawing M18_22

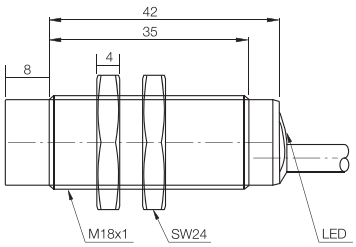

Drawing M18_32

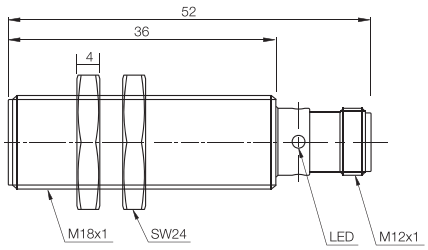

Drawing M18_42

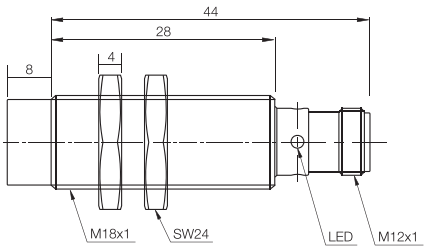

Approvals Certificates

CE

This edition replaces all previous issues. Availability, errors and specification subject to change without notice.

UNOPAL PRIVATE LIMITED
8, UBI ROAD 2, #06-20, ZERVEX
SINGAPORE 408538

TEL: +65-6747 0083
FAX: +65-6747 6041

EMAIL: unopal@singnet.com.sg
WEBSITE: www.unopal.com.sg

Metal Barrel-M18 Short Version

General Data

- Metal housing
- Threaded barrel M18x1
- DC 3-wire
- Function display LED
- Degree of protection IP67
- Flush/non flush mounting

Technical Data

Type	Rated operating distance S_n	Mounting	Output function	Output type	Voltage-range U_B	Rated current	Switching frequency	Ambient temperature	Connection	Mechanical Drawing
Fi5-M18S-OP6L	5mm	flush	NO	PNP	10…30VDC	≤200mA	1000Hz	-25…70°C	2m cable	M18_11
Fi5-M18S-ON6L	5mm	flush	NO	NPN	10…30VDC	≤200mA	1000Hz	-25…70°C	2m cable	M18_11
Fi5-M18S-CP6L	5mm	flush	NC	PNP	10…30VDC	≤200mA	1000Hz	-25…70°C	2m cable	M18_11
Fi5-M18S-CN6L	5mm	flush	NC	NPN	10…30VDC	≤200mA	1000Hz	-25…70°C	2m cable	M18_11
Ni8-M18S-OP6L	8mm	non flush	NO	PNP	10…30VDC	≤200mA	800Hz	-25…70°C	2m cable	M18_21
Ni8-M18S-ON6L	8mm	non flush	NO	NPN	10…30VDC	≤200mA	800Hz	-25…70°C	2m cable	M18_21
Ni8-M18S-CP6L	8mm	non flush	NC	PNP	10…30VDC	≤200mA	800Hz	-25…70°C	2m cable	M18_21
Ni8-M18S-CN6L	8mm	non flush	NC	NPN	10…30VDC	≤200mA	800Hz	-25…70°C	2m cable	M18_21
Fi5-M18S-OP6L-Q12	5mm	flush	NO	PNP	10…30VDC	≤200mA	1000Hz	-25…70°C	M12 connector	M18_31
Fi5-M18S-ON6L-Q12	5mm	flush	NO	NPN	10…30VDC	≤200mA	1000Hz	-25…70°C	M12 connector	M18_31
Fi5-M18S-CP6L-Q12	5mm	flush	NC	PNP	10…30VDC	≤200mA	1000Hz	-25…70°C	M12 connector	M18_31
Fi5-M18S-CN6L-Q12	5mm	flush	NC	NPN	10…30VDC	≤200mA	1000Hz	-25…70°C	M12 connector	M18_31
Ni8-M18S-OP6L-Q12	8mm	non flush	NO	PNP	10…30VDC	≤200mA	800Hz	-25…70°C	M12 connector	M18_41
Ni8-M18S-ON6L-Q12	8mm	non flush	NO	NPN	10…30VDC	≤200mA	800Hz	-25…70°C	M12 connector	M18_41
Ni8-M18S-CP6L-Q12	8mm	non flush	NC	PNP	10…30VDC	≤200mA	800Hz	-25…70°C	M12 connector	M18_41
Ni8-M18S-CN6L-Q12	8mm	non flush	NC	NPN	10…30VDC	≤200mA	800Hz	-25…70°C	M12 connector	M18_41

Connection Diagram

Bu = blue; Bn = brown; Bk = black; Wh = white; (1-4) = Connector pin M12

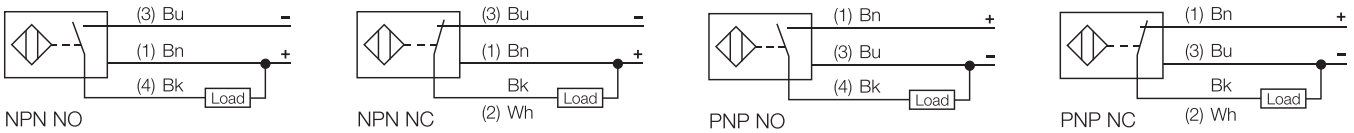

Mechanical Drawing

Drawing M18_11

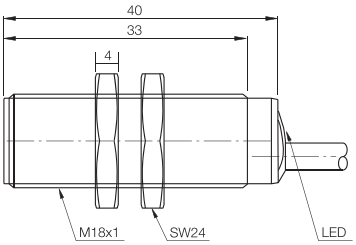

Drawing M18_21

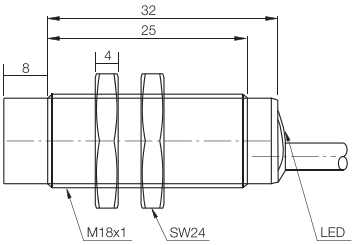

Drawing M18_31

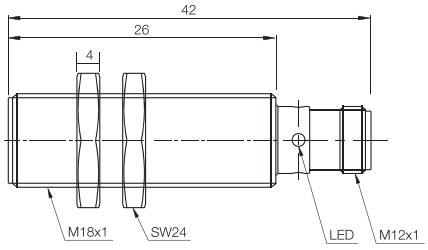

Drawing M18_41

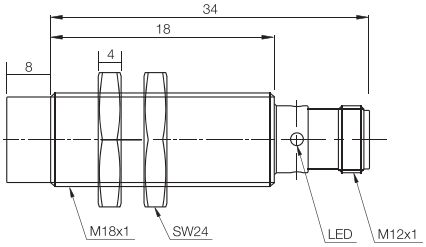

Approvals Certificates

CE

This edition replaces all previous issues. Availability, errors and specification subject to change without notice.

UNOPAL PRIVATE LIMITED
8, UBI ROAD 2, #06-20, ZERVEX
SINGAPORE 408538

TEL: +65-6747 0083
FAX: +65-6747 6041

EMAIL: unopal@singnet.com.sg
WEBSITE: www.unopal.com.sg

Metal Barrel-M18

General Data

- Metal housing
- Threaded barrel M18x1
- DC 3-wire
- Function display LED
- Degree of protection IP67
- Standard size
- Flush/non flush mounting

Technical Data

Type	Rated operating distance S_n	Mounting	Output function	Output type	Voltage-range U_B	Rated current	Switching frequency	Ambient temperature	Connection	Mechanical Drawing
Fi5-M18-OP6L	5mm	flush	NO	PNP	10…30VDC	≤200mA	1000Hz	-25…70°C	2m cable	M18_12
Fi5-M18-ON6L	5mm	flush	NO	NPN	10…30VDC	≤200mA	1000Hz	-25…70°C	2m cable	M18_12
Fi5-M18-CP6L	5mm	flush	NC	PNP	10…30VDC	≤200mA	1000Hz	-25…70°C	2m cable	M18_12
Fi5-M18-CN6L	5mm	flush	NC	NPN	10…30VDC	≤200mA	1000Hz	-25…70°C	2m cable	M18_12
Ni8-M18-OP6L	8mm	non flush	NO	PNP	10…30VDC	≤200mA	800Hz	-25…70°C	2m cable	M18_22
Ni8-M18-ON6L	8mm	non flush	NO	NPN	10…30VDC	≤200mA	800Hz	-25…70°C	2m cable	M18_22
Ni8-M18-CP6L	8mm	non flush	NC	PNP	10…30VDC	≤200mA	800Hz	-25…70°C	2m cable	M18_22
Ni8-M18-CN6L	8mm	non flush	NC	NPN	10…30VDC	≤200mA	800Hz	-25…70°C	2m cable	M18_22
Fi5-M18-OP6L-Q12	5mm	flush	NO	PNP	10…30VDC	≤200mA	1000Hz	-25…70°C	M12 connector	M18_32
Fi5-M18-ON6L-Q12	5mm	flush	NO	NPN	10…30VDC	≤200mA	1000Hz	-25…70°C	M12 connector	M18_32
Fi5-M18-CP6L-Q12	5mm	flush	NC	PNP	10…30VDC	≤200mA	1000Hz	-25…70°C	M12 connector	M18_32
Fi5-M18-CN6L-Q12	5mm	flush	NC	NPN	10…30VDC	≤200mA	1000Hz	-25…70°C	M12 connector	M18_32
Ni8-M18-OP6L-Q12	8mm	non flush	NO	PNP	10…30VDC	≤200mA	800Hz	-25…70°C	M12 connector	M18_42
Ni8-M18-ON6L-Q12	8mm	non flush	NO	NPN	10…30VDC	≤200mA	800Hz	-25…70°C	M12 connector	M18_42
Ni8-M18-CP6L-Q12	8mm	non flush	NC	PNP	10…30VDC	≤200mA	800Hz	-25…70°C	M12 connector	M18_42
Ni8-M18-CN6L-Q12	8mm	non flush	NC	NPN	10…30VDC	≤200mA	800Hz	-25…70°C	M12 connector	M18_42

Connection Diagram

Bu = blue; Bn = brown; Bk = black; Wh = white; (1-4) = Connector pin M12

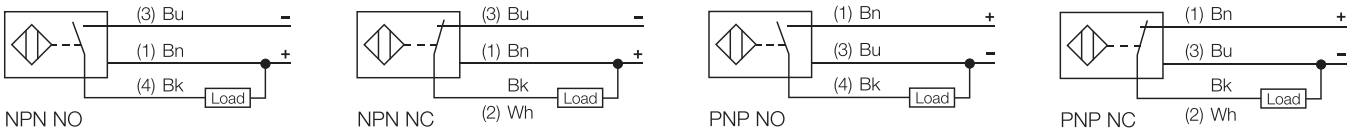

Mechanical Drawing

Drawing M18_12

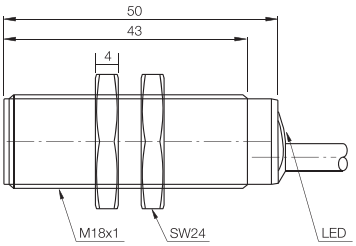

Drawing M18_22

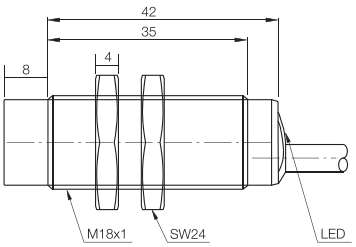

Drawing M18_32

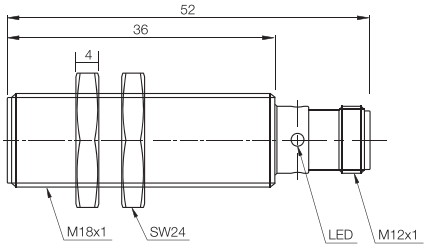

Drawing M18_42

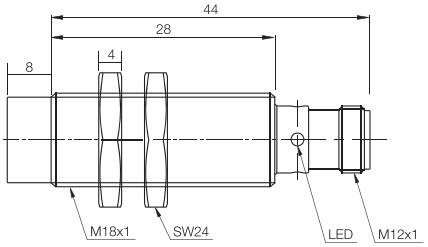

Approvals Certificates

CE

This edition replaces all previous issues. Availability, errors and specification subject to change without notice.

UNOPAL PRIVATE LIMITED
8, UBI ROAD 2, #06-20, ZERVEX
SINGAPORE 408538

TEL: +65-6747 0083
FAX: +65-6747 6041

EMAIL: unopal@singnet.com.sg
WEBSITE: www.unopal.com.sg

Metal Barrel-M18

General Data

- Metal housing
- Threaded barrel M18x1
- DC 4-wire
- Function display LED
- Degree of protection IP67
- Standard size
- Flush/non flush mounting

Technical Data

Type	Rated operating distance S_n	Mounting	Output function	Output type	Voltage-range U_B	Rated current	Switching frequency	Ambient temperature	Connection	Mechanical Drawing
Fi5-M18-BP6L	5mm	flush	NO+NC	PNP	10…30VDC	≤200mA	1000Hz	-25…70°C	2m cable	M18_12
Fi5-M18-BN6L	5mm	flush	NO+NC	NPN	10…30VDC	≤200mA	1000Hz	-25…70°C	2m cable	M18_12
Ni8-M18-BP6L	8mm	non flush	NO+NC	PNP	10…30VDC	≤200mA	800Hz	-25…70°C	2m cable	M18_22
Ni8-M18-BN6L	8mm	non flush	NO+NC	NPN	10…30VDC	≤200mA	800Hz	-25…70°C	2m cable	M18_22
Fi5-M18-BP6L-Q12	5mm	flush	NO+NC	PNP	10…30VDC	≤200mA	1000Hz	-25…70°C	M12 connector	M18_33
Fi5-M18-BN6L-Q12	5mm	flush	NO+NC	NPN	10…30VDC	≤200mA	1000Hz	-25…70°C	M12 connector	M18_33
Ni8-M18-BP6L-Q12	8mm	non flush	NO+NC	PNP	10…30VDC	≤200mA	800Hz	-25…70°C	M12 connector	M18_43
Ni8-M18-BN6L-Q12	8mm	non flush	NO+NC	NPN	10…30VDC	≤200mA	800Hz	-25…70°C	M12 connector	M18_43

Connection Diagram

Bu = blue; Bn = brown; Bk = black; Wh = white; (1-4) = Connector pin M12

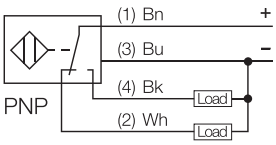

2 NC/4 NO

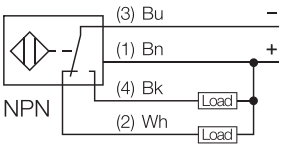

2 NC/4 NO

Mechanical Drawing

Drawing M18_12

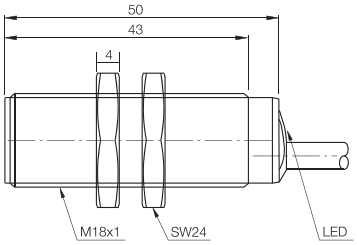

Drawing M18_22

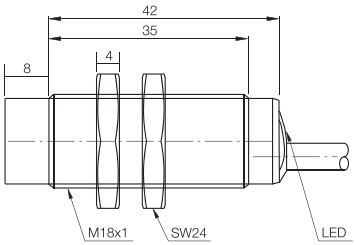

Drawing M18_33

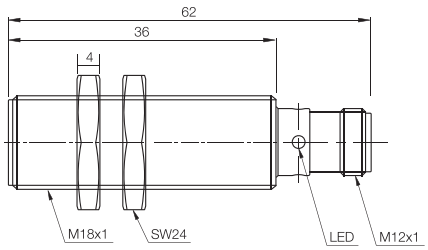

Drawing M18_43

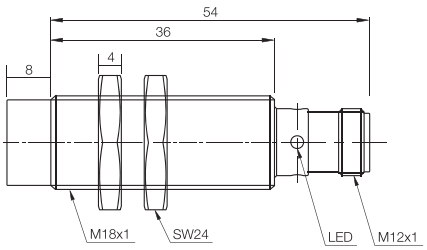

Approvals Certificates

CE

This edition replaces all previous issues. Availability, errors and specification subject to change without notice.

UNOPAL PRIVATE LIMITED
8, UBI ROAD 2, #06-20, ZERVEX
SINGAPORE 408538

TEL: +65-6747 0083
FAX: +65-6747 6041

EMAIL: unopal@singnet.com.sg
WEBSITE: www.unopal.com.sg

Metal Barrel-M18 Long Version

General Data

- Metal housing
- Threaded barrel M18x1
- DC 3/4-wire
- Function display LED
- Degree of protection IP67
- Flush/non flush mounting

Technical Data

Type	Rated operating distance S_n	Mounting	Output function	Output type	Voltage-range U_B	Rated current	Switching frequency	Ambient temperature	Connection	Mechanical Drawing
Fi5-M18E-OP6L	5mm	flush	NO	PNP	10…30VDC	≤200mA	1000Hz	-25…70°C	2m cable	M18_13
Fi5-M18E-ON6L	5mm	flush	NO	NPN	10…30VDC	≤200mA	1000Hz	-25…70°C	2m cable	M18_13
Fi5-M18E-CP6L	5mm	flush	NC	PNP	10…30VDC	≤200mA	1000Hz	-25…70°C	2m cable	M18_13
Fi5-M18E-CN6L	5mm	flush	NC	NPN	10…30VDC	≤200mA	1000Hz	-25…70°C	2m cable	M18_13
Fi5-M18E-BP6L	5mm	flush	NO+NC	PNP	10…30VDC	≤200mA	1000Hz	-25…70°C	2m cable	M18_13
Fi5-M18E-BN6L	5mm	flush	NO+NC	NPN	10…30VDC	≤200mA	1000Hz	-25…70°C	2m cable	M18_13
Ni8-M18E-OP6L	8mm	non flush	NO	PNP	10…30VDC	≤200mA	800Hz	-25…70°C	2m cable	M18_23
Ni8-M18E-ON6L	8mm	non flush	NO	NPN	10…30VDC	≤200mA	800Hz	-25…70°C	2m cable	M18_23
Ni8-M18E-CP6L	8mm	non flush	NC	PNP	10…30VDC	≤200mA	800Hz	-25…70°C	2m cable	M18_23
Ni8-M18E-CN6L	8mm	non flush	NC	NPN	10…30VDC	≤200mA	800Hz	-25…70°C	2m cable	M18_23
Ni8-M18E-BP6L	8mm	non flush	NO+NC	PNP	10…30VDC	≤200mA	800Hz	-25…70°C	2m cable	M18_23
Ni8-M18E-BN6L	8mm	non flush	NO+NC	NPN	10…30VDC	≤200mA	800Hz	-25…70°C	2m cable	M18_23

Connection Diagram

Bu = blue; Bn = brown; Bk = black; Wh = white; (1-4) = Connector pin M12

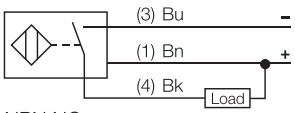

NPN NO

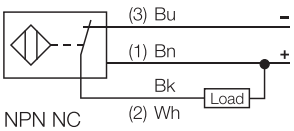

NPN NC

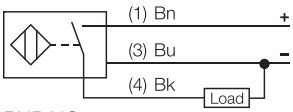

PNP NO

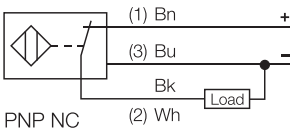

PNP NC

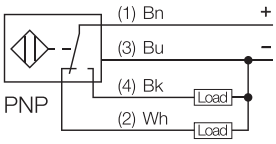

PNP

2 NC/4 NO

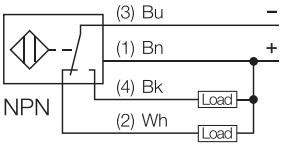

NPN

2 NC/4 NO

Mechanical Drawing

Drawing M18_13

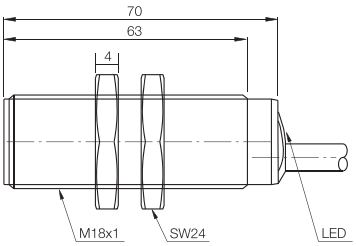

Drawing M18_23

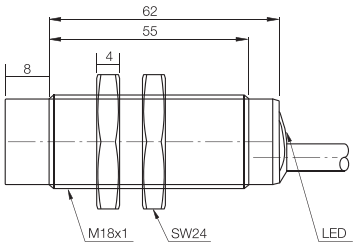

Approvals Certificates

CE

This edition replaces all previous issues. Availability, errors and specification subject to change without notice.

UNOPAL PRIVATE LIMITED
8, UBI ROAD 2, #06-20, ZERVEX
SINGAPORE 408538

TEL: +65-6747 0083
FAX: +65-6747 6041

EMAIL: unopal@singnet.com.sg
WEBSITE: www.unopal.com.sg

Metal Barrel-M18 Long Version

General Data

- Metal housing
- Threaded barrel M18x1
- DC 3/4-wire
- Function display LED
- Degree of protection IP67
- Flush/non flush mounting

Technical Data

Type	Rated operating distance S_n	Mounting	Output function	Output type	Voltage-range U_B	Rated current	Switching frequency	Ambient temperature	Connection	Mechanical Drawing
Fi5-M18E-OP6L-Q12	5mm	flush	NO	PNP	10…30VDC	≤200mA	1000Hz	-25…70°C	M12 connector	M18_34
Fi5-M18E-ON6L-Q12	5mm	flush	NO	NPN	10…30VDC	≤200mA	1000Hz	-25…70°C	M12 connector	M18_34
Fi5-M18E-CP6L-Q12	5mm	flush	NC	PNP	10…30VDC	≤200mA	1000Hz	-25…70°C	M12 connector	M18_34
Fi5-M18E-CN6L-Q12	5mm	flush	NC	NPN	10…30VDC	≤200mA	1000Hz	-25…70°C	M12 connector	M18_34
Fi5-M18E-BP6L-Q12	5mm	flush	NO+NC	PNP	10…30VDC	≤200mA	1000Hz	-25…70°C	M12 connector	M18_34
Fi5-M18E-BN6L-Q12	5mm	flush	NO+NC	NPN	10…30VDC	≤200mA	1000Hz	-25…70°C	M12 connector	M18_34
Ni8-M18E-OP6L-Q12	8mm	non flush	NO	PNP	10…30VDC	≤200mA	800Hz	-25…70°C	M12 connector	M18_44
Ni8-M18E-ON6L-Q12	8mm	non flush	NO	NPN	10…30VDC	≤200mA	800Hz	-25…70°C	M12 connector	M18_44
Ni8-M18E-CP6L-Q12	8mm	non flush	NC	PNP	10…30VDC	≤200mA	800Hz	-25…70°C	M12 connector	M18_44
Ni8-M18E-CN6L-Q12	8mm	non flush	NC	NPN	10…30VDC	≤200mA	800Hz	-25…70°C	M12 connector	M18_44
Ni8-M18E-BP6L-Q12	8mm	non flush	NO+NC	PNP	10…30VDC	≤200mA	800Hz	-25…70°C	M12 connector	M18_44
Ni8-M18E-BN6L-Q12	8mm	non flush	NO+NC	NPN	10…30VDC	≤200mA	800Hz	-25…70°C	M12 connector	M18_44

Connection Diagram

Bu = blue; Bn = brown; Bk = black; Wh = white; (1-4) = Connector pin M12

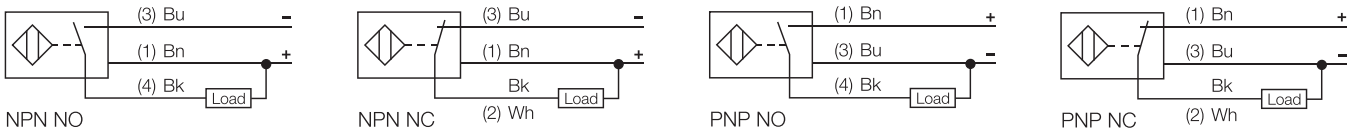

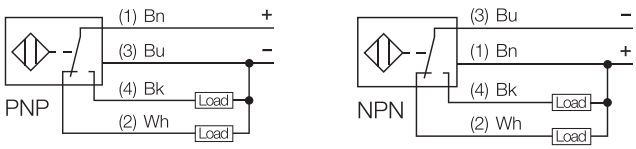

2 NC/4 NO

2 NC/4 NO

Mechanical Drawing

Drawing M18_34

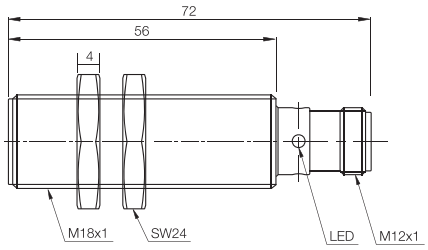

Drawing M18_44

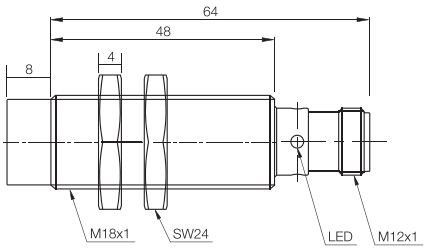

Approvals Certificates

CE

This edition replaces all previous issues. Availability, errors and specification subject to change without notice.

UNOPAL PRIVATE LIMITED
8, UBI ROAD 2, #06-20, ZERVEX
SINGAPORE 408538

TEL: +65-6747 0083
FAX: +65-6747 6041

EMAIL: unopal@singnet.com.sg
WEBSITE: www.unopal.com.sg

Metal Barrel-M18

General Data

- Metal housing
- Threaded barrel M18x1
- Extended operating distance
- DC 3-wire
- Function display LED
- Degree of protection IP67
- Standard size

Technical Data

Type	Rated operating distance S_n	Mounting	Output function	Output type	Voltage-range U_B	Rated current	Switching frequency	Ambient temperature	Connection	Mechanical Drawing
Ni10-M18-OP6L	10mm	non flush	NO	PNP	10…30VDC	≤200mA	500Hz	-25…70°C	2m cable	M18_22
Ni10-M18-ON6L	10mm	non flush	NO	NPN	10…30VDC	≤200mA	500Hz	-25…70°C	2m cable	M18_22
Ni10-M18-CP6L	10mm	non flush	NC	PNP	10…30VDC	≤200mA	500Hz	-25…70°C	2m cable	M18_22
Ni10-M18-CN6L	10mm	non flush	NC	NPN	10…30VDC	≤200mA	500Hz	-25…70°C	2m cable	M18_22
Ni10-M18-OP6L-Q12	10mm	non flush	NO	PNP	10…30VDC	≤200mA	300Hz	-25…70°C	M12 connector	M18_42
Ni10-M18-ON6L-Q12	10mm	non flush	NO	NPN	10…30VDC	≤200mA	300Hz	-25…70°C	M12 connector	M18_42
Ni10-M18-CP6L-Q12	10mm	non flush	NC	PNP	10…30VDC	≤200mA	300Hz	-25…70°C	M12 connector	M18_42
Ni10-M18-CN6L-Q12	10mm	non flush	NC	NPN	10…30VDC	≤200mA	300Hz	-25…70°C	M12 connector	M18_42

Connection Diagram

Bu = blue; Bn = brown; Bk = black; Wh = white; (1-4) = Connector pin M12

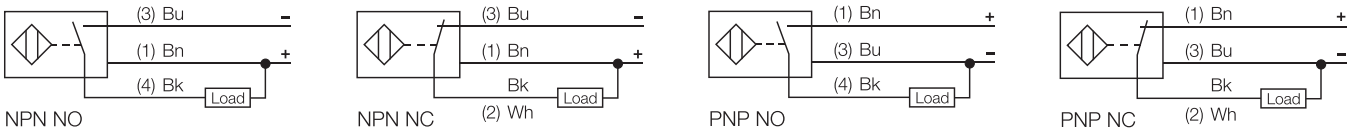

Mechanical Drawing

Drawing M18_22

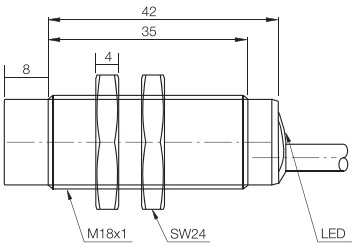

Drawing M18_42

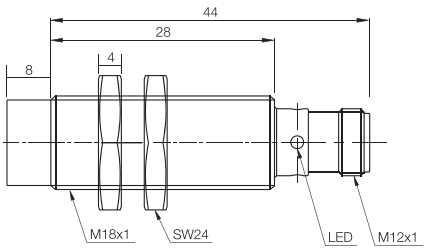

Approvals Certificates

CE

This edition replaces all previous issues. Availability, errors and specification subject to change without notice.

UNOPAL PRIVATE LIMITED
8, UBI ROAD 2, #06-20, ZERVEX
SINGAPORE 408538

TEL: +65-6747 0083
FAX: +65-6747 6041

EMAIL: unopal@singnet.com.sg
WEBSITE: www.unopal.com.sg

Metal Barrel-M18

General Data

- Metal housing
- Threaded barrel M18x1
- AC 2-wire
- Function display LED
- Degree of protection IP67
- Standard size
- Flush/non flush mounting
- Wide voltage range

Technical Data

Type	Rated operating distance S_n	Mounting	Output function	Output type	Voltage-range U_B	Rated current	Switching frequency	Ambient temperature	Connection	Mechanical Drawing
Fi5-M18-OSA3L	5mm	flush	NO	AC	20…250VAC	≤300mA	20Hz	-25…70°C	2m cable	M18_14
Fi5-M18-CSA3L	5mm	flush	NC	AC	20…250VAC	≤300mA	20Hz	-25…70°C	2m cable	M18_14
Ni8-M18-OSA3L	8mm	non flush	NO	AC	20…250VAC	≤300mA	20Hz	-25…70°C	2m cable	M18_24
Ni8-M18-CSA3L	8mm	non flush	NC	AC	20…250VAC	≤300mA	20Hz	-25…70°C	2m cable	M18_24
Fi5-M18-OSA3L-Q12	5mm	flush	NO	AC	20…250VAC	≤300mA	20Hz	-25…70°C	M12 connector	M18_35
Fi5-M18-CSA3L-Q12	5mm	flush	NC	AC	20…250VAC	≤300mA	20Hz	-25…70°C	M12 connector	M18_35
Ni8-M18-OSA3L-Q12	8mm	non flush	NO	AC	20…250VAC	≤300mA	20Hz	-25…70°C	M12 connector	M18_45
Ni8-M18-CSA3L-Q12	8mm	non flush	NC	AC	20…250VAC	≤300mA	20Hz	-25…70°C	M12 connector	M18_45

Connection Diagram

Bu = blue; Bn = brown; Bk = black; Wh = white; (1-4) = Connector pin M12

AC-2 wire NO

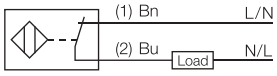

AC-2 wire NC

Mechanical Drawing

Drawing M18_14

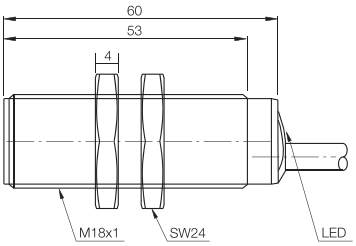

Drawing M18_24

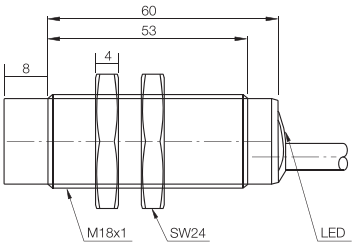

Drawing M18_35

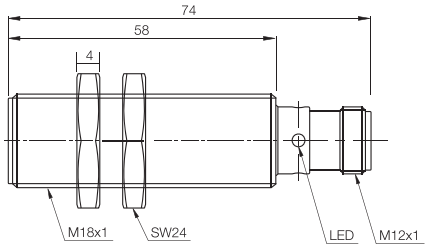

Drawing M18_45

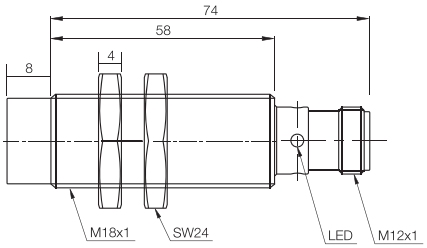

Approvals Certificates

CE

This edition replaces all previous issues. Availability, errors and specification subject to change without notice.

UNOPAL PRIVATE LIMITED
8, UBI ROAD 2, #06-20, ZERVEX
SINGAPORE 408538

TEL: +65-6747 0083
FAX: +65-6747 6041

EMAIL: unopal@singnet.com.sg
WEBSITE: www.unopal.com.sg

Metal Barrel-M18

General Data

- Metal housing
- Threaded barrel M18x1
- AC/DC 2-wire
- Function display LED
- Degree of protection IP67
- Standard size
- Flush/non flush mounting
- Wide voltage range

Technical Data

Type	Rated operating distance S_n	Mounting	Output function	Output type	Voltage-range U_B	Rated current	Switching frequency AC // DC	Ambient temperature	Connection	Mechanical Drawing
Fi5-M18-OA41L	5mm	flush	NO	AC/DC	20…250VAC/DC	≤300mA	15Hz//50Hz	-25…85°C	2m cable	M18_14
Fi5-M18-CA41L	5mm	flush	NC	AC/DC	20…250VAC/DC	≤300mA	15Hz//50Hz	-25…85°C	2m cable	M18_14
Ni8-M18-OA41L	8mm	non flush	NO	AC/DC	20…250VAC/DC	≤300mA	15Hz//50Hz	-25…85°C	2m cable	M18_24
Ni8-M18-CA41L	8mm	non flush	NC	AC/DC	20…250VAC/DC	≤300mA	15Hz//50Hz	-25…85°C	2m cable	M18_24
Fi5-M18-OA41L-Q12	5mm	flush	NO	AC/DC	20…250VAC/DC	≤300mA	15Hz//50Hz	-25…85°C	M12 connector	M18_35
Fi5-M18-CA41L-Q12	5mm	flush	NC	AC/DC	20…250VAC/DC	≤300mA	15Hz//50Hz	-25…85°C	M12 connector	M18_35
Ni8-M18-OA41L-Q12	8mm	non flush	NO	AC/DC	20…250VAC/DC	≤300mA	15Hz//50Hz	-25…85°C	M12 connector	M18_45
Ni8-M18-CA41L-Q12	8mm	non flush	NC	AC/DC	20…250VAC/DC	≤300mA	15Hz//50Hz	-25…85°C	M12 connector	M18_45

Connection Diagram

Bu = blue; Bn = brown; Bk = black; Wh = white; (1-4) = Connector pin M12

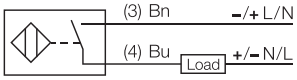

AC/DC-2 wire NO

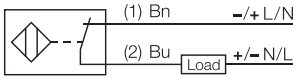

AC/DC-2 wire NC

Mechanical Drawing

Drawing M18_14

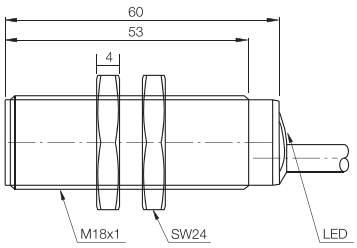

Drawing M18_24

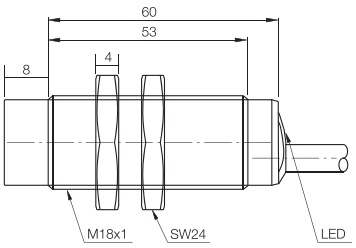

Drawing M18_35

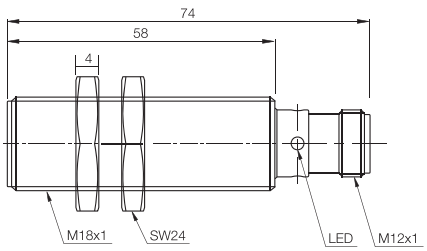

Drawing M18_45

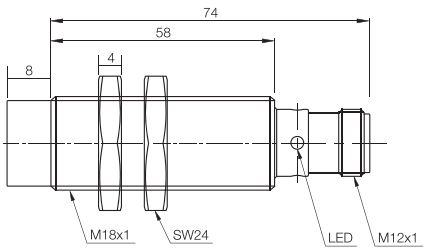

Approvals Certificates

CE

This edition replaces all previous issues. Availability, errors and specification subject to change without notice.

UNOPAL PRIVATE LIMITED
8, UBI ROAD 2, #06-20, ZERVEX
SINGAPORE 408538

TEL: +65-6747 0083
FAX: +65-6747 6041

EMAIL: unopal@singnet.com.sg
WEBSITE: www.unopal.com.sg

Metal Barrel-M30 Short Version

General Data

- Metal housing
- Threaded barrel M30x1,5
- DC 2-wire
- Function display LED
- Degree of protection IP67
- Flush/non flush mounting
- Compact size

Technical Data

Type	Rated operating distance S_n	Mounting	Output function	Output type	Voltage-range U_B	Rated current	Switching frequency	Ambient temperature	Connection	Mechanical Drawing
Fi10-M30S-OD6L	10mm	flush	NO	DC	10…30VDC	≤100mA	300Hz	-25…70°C	2m cable	1
Fi10-M30S-CD6L	10mm	flush	NC	DC	10…30VDC	≤100mA	300Hz	-25…70°C	2m cable	1
Ni15-M30S-OD6L	15mm	non flush	NO	DC	10…30VDC	≤100mA	200Hz	-25…70°C	2m cable	2
Ni15-M30S-CD6L	15mm	non flush	NC	DC	10…30VDC	≤100mA	200Hz	-25…70°C	2m cable	2
Fi10-M30S-OD6L-Q12	10mm	flush	NO	DC	10…30VDC	≤100mA	300Hz	-25…70°C	M12 connector	3
Fi10-M30S-CD6L-Q12	10mm	flush	NC	DC	10…30VDC	≤100mA	300Hz	-25…70°C	M12 connector	3
Ni15-M30S-OD6L-Q12	15mm	non flush	NO	DC	10…30VDC	≤100mA	200Hz	-25…70°C	M12 connector	4
Ni15-M30S-CD6L-Q12	15mm	non flush	NC	DC	10…30VDC	≤100mA	200Hz	-25…70°C	M12 connector	4

Connection Diagram

Bu = blue; Bn = brown; Bk = black; Wh = white; (1-4) = Connector pin M12

Cable

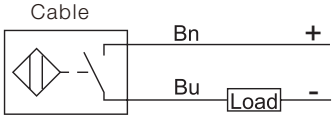

DC-2 wire NO

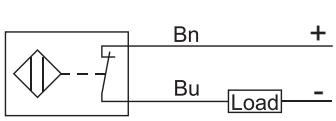

DC-2 wire NC

Connector

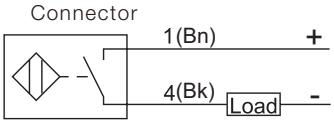

DC-2 wire NO

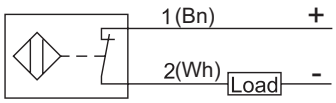

DC-2 wire NC

Mechanical Drawing

Drawing 1

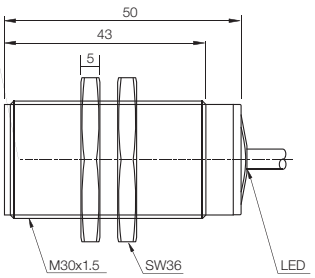

Drawing 2

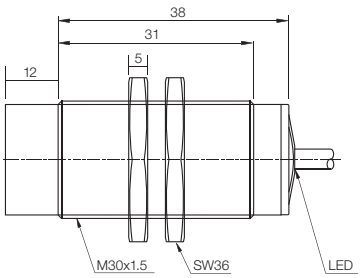

Drawing 3

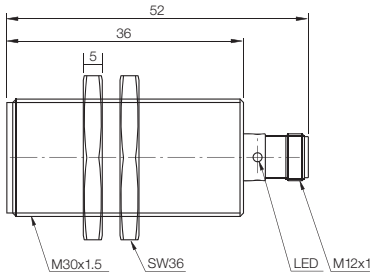

Drawing 4

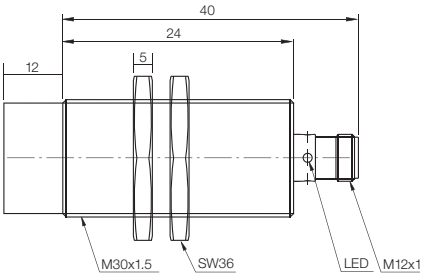

Approvals Certificates

CE

UNOPAL PRIVATE LIMITED
8, UBI ROAD 2, #06-20, ZERVEX
SINGAPORE 408538

TEL: +65-6747 0083
FAX: +65-6747 6041

EMAIL: unopal@singnet.com.sg
WEBSITE: www.unopal.com.sg

This edition replaces all previous issues. Availability, errors and specification subject to change without notice.

Metal Barrel-M30

General Data

- Metal housing
- Threaded barrel M30x1,5
- DC 2-wire
- Function display LED
- Degree of protection IP67
- Standard size
- Flush/non flush mounting

Technical Data

Type	Rated operating distance S_n	Mounting	Output function	Output type	Voltage-range U_B	Rated current	Switching frequency	Ambient temperature	Connection	Mechanical Drawing
Fi10-M30-OD6L	10mm	flush	NO	DC	10…30VDC	≤100mA	300Hz	-25…70°C	2m cable	1
Fi10-M30-CD6L	10mm	flush	NC	DC	10…30VDC	≤100mA	300Hz	-25…70°C	2m cable	1
Ni15-M30-OD6L	15mm	non flush	NO	DC	10…30VDC	≤100mA	200Hz	-25…70°C	2m cable	2
Ni15-M30-CD6L	15mm	non flush	NC	DC	10…30VDC	≤100mA	200Hz	-25…70°C	2m cable	2
Fi10-M30-OD6L-Q12	10mm	flush	NO	DC	10…30VDC	≤100mA	300Hz	-25…70°C	M12 connector	3
Fi10-M30-CD6L-Q12	10mm	flush	NC	DC	10…30VDC	≤100mA	300Hz	-25…70°C	M12 connector	3
Ni15-M30-OD6L-Q12	15mm	non flush	NO	DC	10…30VDC	≤100mA	200Hz	-25…70°C	M12 connector	4
Ni15-M30-CD6L-Q12	15mm	non flush	NC	DC	10…30VDC	≤100mA	200Hz	-25…70°C	M12 connector	4

Connection Diagram

Bu = blue; Bn = brown; Bk = black; Wh = white; (1-4) = Connector pin M12

Cable

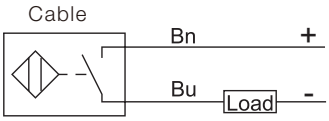

DC-2 wire NO

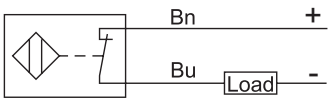

DC-2 wire NC

Connector

DC-2 wire NO

DC-2 wire NC

Mechanical Drawing

Drawing 1

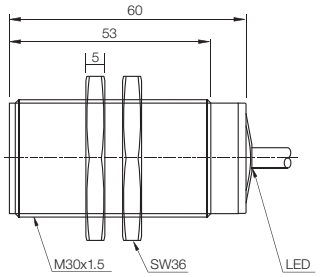

Drawing 2

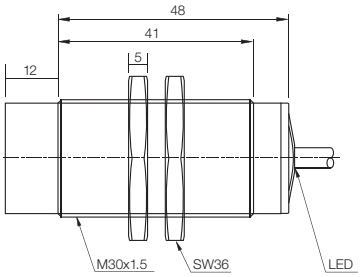

Drawing 3

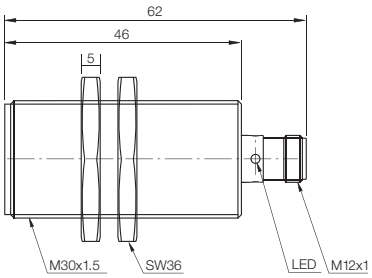

Drawing 4

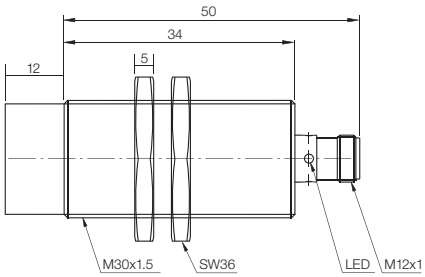

Approvals Certificates

CE

This edition replaces all previous issues. Availability, errors and specification subject to change without notice.

UNOPAL PRIVATE LIMITED
8, UBI ROAD 2, #06-20, ZERVEX
SINGAPORE 408538

TEL: +65-6747 0083
FAX: +65-6747 6041

EMAIL: unopal@singnet.com.sg
WEBSITE: www.unopal.com.sg

Metal Barrel-M30 Short Version

General Data

- Metal housing
- Threaded barrel M30x1,5
- DC 3-wire
- Function display LED
- Degree of protection IP67
- Flush/non flush mounting
- Compact size
- Varied output function

Technical Data

Type	Rated operating distance S_n	Mounting	Output function	Output type	Voltage-range U_B	Rated current	Switching frequency	Ambient temperature	Connection	Mechanical Drawing
Fi10-M30S-OP6L	10mm	flush	NO	PNP	10…30VDC	≤200mA	500Hz	-25…70°C	2m cable	1
Fi10-M30S-ON6L	10mm	flush	NO	NPN	10…30VDC	≤200mA	500Hz	-25…70°C	2m cable	1
Fi10-M30S-CP6L	10mm	flush	NC	PNP	10…30VDC	≤200mA	500Hz	-25…70°C	2m cable	1
Fi10-M30S-CN6L	10mm	flush	NC	NPN	10…30VDC	≤200mA	500Hz	-25…70°C	2m cable	1
Ni15-M30S-OP6L	15mm	non flush	NO	PNP	10…30VDC	≤200mA	300Hz	-25…70°C	2m cable	2
Ni15-M30S-ON6L	15mm	non flush	NO	NPN	10…30VDC	≤200mA	300Hz	-25…70°C	2m cable	2
Ni15-M30S-CP6L	15mm	non flush	NC	PNP	10…30VDC	≤200mA	300Hz	-25…70°C	2m cable	2
Ni15-M30S-CN6L	15mm	non flush	NC	NPN	10…30VDC	≤200mA	300Hz	-25…70°C	2m cable	2
Fi10-M30S-OP6L-Q12	10mm	flush	NO	PNP	10…30VDC	≤200mA	500Hz	-25…70°C	M12 connector	3
Fi10-M30S-ON6L-Q12	10mm	flush	NO	NPN	10…30VDC	≤200mA	500Hz	-25…70°C	M12 connector	3
Fi10-M30S-CP6L-Q12	10mm	flush	NC	PNP	10…30VDC	≤200mA	500Hz	-25…70°C	M12 connector	3
Fi10-M30S-CN6L-Q12	10mm	flush	NC	NPN	10…30VDC	≤200mA	500Hz	-25…70°C	M12 connector	3
Ni15-M30S-OP6L-Q12	15mm	non flush	NO	PNP	10…30VDC	≤200mA	300Hz	-25…70°C	M12 connector	4
Ni15-M30S-ON6L-Q12	15mm	non flush	NO	NPN	10…30VDC	≤200mA	300Hz	-25…70°C	M12 connector	4
Ni15-M30S-CP6L-Q12	15mm	non flush	NC	PNP	10…30VDC	≤200mA	300Hz	-25…70°C	M12 connector	4
Ni15-M30S-CN6L-Q12	15mm	non flush	NC	NPN	10…30VDC	≤200mA	300Hz	-25…70°C	M12 connector	4

Connection Diagram

Bu = blue; Bn = brown; Bk = black; Wh = white; (1-4) = Connector pin M12

Cable

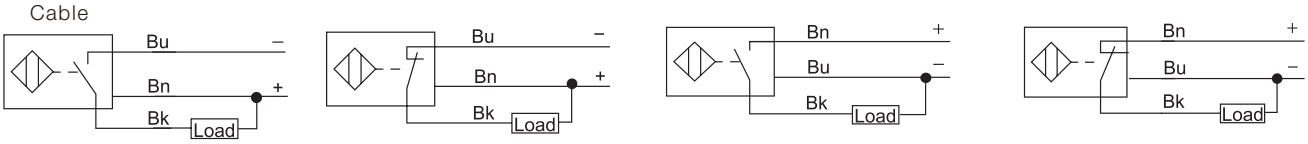

NPN NO NPN NC PNP NO PNP NC

Connector

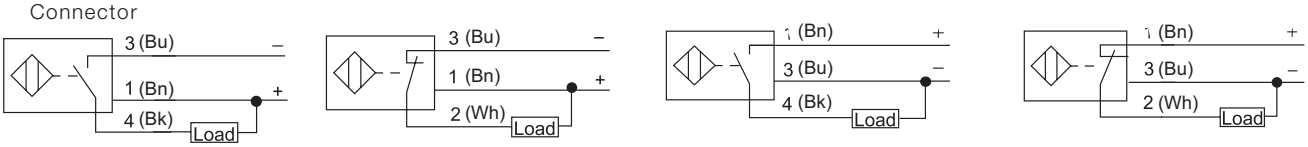

NPN NO NPN NC PNP NO PNP NC

Approvals Certificates

CE

This edition replaces all previous issues. Availability, errors and specification subject to change without notice.

UNOPAL PRIVATE LIMITED
8, UBI ROAD 2, #06-20, ZERVEX
SINGAPORE 408538

TEL: +65-6747 0083
FAX: +65-6747 6041

EMAIL: unopal@singnet.com.sg
WEBSITE: www.unopal.com.sg

Metal Barrel-M30 Short Version

Mechanical Drawing

Drawing 1

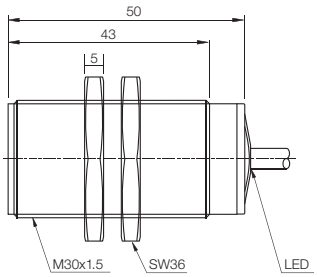

Drawing 2

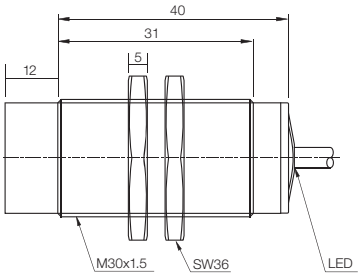

Drawing 3

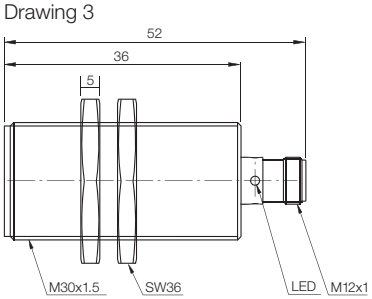

Drawing 4

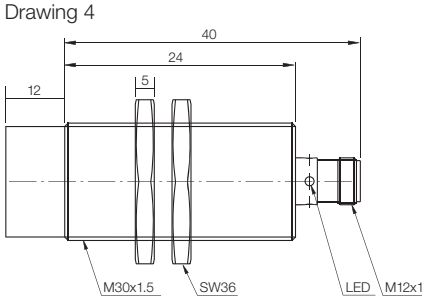

Approvals
Certificates

This edition replaces all previous issues. Availability, errors and specification subject to change without notice.

UNOPAL PRIVATE LIMITED
8, UBI ROAD 2, #06-20, ZERVEX
SINGAPORE 408538

TEL: +65-6747 0083
FAX: +65-6747 6041

EMAIL: unopal@singnet.com.sg
WEBSITE: www.unopal.com.sg

Metal Barrel-M30

General Data

- Metal housing
- Threaded barrel M30x1,5
- DC 3-wire
- Function display LED
- Degree of protection IP67
- Standard size
- Flush/non flush mounting
- Varied output function

Technical Data

Type	Rated operating distance S_n	Mounting	Output function	Output type	Voltage-range U_B	Rated current	Switching frequency	Ambient temperature	Connection	Mechanical Drawing
Fi10-M30-OP6L	10mm	flush	NO	PNP	10…30VDC	≤200mA	500Hz	-25…70°C	2m cable	1
Fi10-M30-ON6L	10mm	flush	NO	NPN	10…30VDC	≤200mA	500Hz	-25…70°C	2m cable	1
Fi10-M30-CP6L	10mm	flush	NC	PNP	10…30VDC	≤200mA	500Hz	-25…70°C	2m cable	1
Fi10-M30-CN6L	10mm	flush	NC	NPN	10…30VDC	≤200mA	500Hz	-25…70°C	2m cable	1
Ni15-M30-OP6L	15mm	non flush	NO	PNP	10…30VDC	≤200mA	300Hz	-25…70°C	2m cable	2
Ni15-M30-ON6L	15mm	non flush	NO	NPN	10…30VDC	≤200mA	300Hz	-25…70°C	2m cable	2
Ni15-M30-CP6L	15mm	non flush	NC	PNP	10…30VDC	≤200mA	300Hz	-25…70°C	2m cable	2
Ni15-M30-CN6L	15mm	non flush	NC	NPN	10…30VDC	≤200mA	300Hz	-25…70°C	2m cable	2
Fi10-M30-OP6L-Q12	10mm	flush	NO	PNP	10…30VDC	≤200mA	500Hz	-25…70°C	M12 connector	3
Fi10-M30-ON6L-Q12	10mm	flush	NO	NPN	10…30VDC	≤200mA	500Hz	-25…70°C	M12 connector	3
Fi10-M30-CP6L-Q12	10mm	flush	NC	PNP	10…30VDC	≤200mA	500Hz	-25…70°C	M12 connector	3
Fi10-M30-CN6L-Q12	10mm	flush	NC	NPN	10…30VDC	≤200mA	500Hz	-25…70°C	M12 connector	3
Ni15-M30-OP6L-Q12	15mm	non flush	NO	PNP	10…30VDC	≤200mA	300Hz	-25…70°C	M12 connector	3
Ni15-M30-ON6L-Q12	15mm	non flush	NO	NPN	10…30VDC	≤200mA	300Hz	-25…70°C	M12 connector	3
Ni15-M30-CP6L-Q12	15mm	non flush	NC	PNP	10…30VDC	≤200mA	300Hz	-25…70°C	M12 connector	3
Ni15-M30-CN6L-Q12	15mm	non flush	NC	NPN	10…30VDC	≤200mA	300Hz	-25…70°C	M12 connector	3

Connection Diagram

Bu = blue; Bn = brown; Bk = black; Wh = white; (1-4) = Connector pin M12

Cable

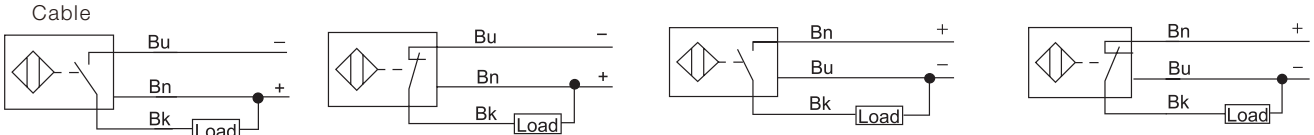

NPN NO NPN NC PNP NO PNP NC

Connector

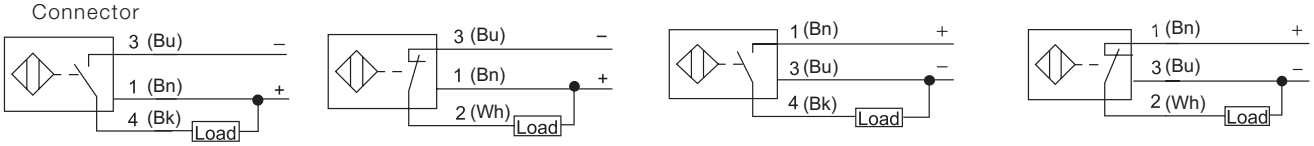

NPN NO NPN NC PNP NO PNP NC

Approvals Certificates

CE

This edition replaces all previous issues. Availability, errors and specification subject to change without notice.

UNOPAL PRIVATE LIMITED
8, UBI ROAD 2, #06-20, ZERVEX
SINGAPORE 408538

TEL: +65-6747 0083
FAX: +65-6747 6041

EMAIL: unopal@singnet.com.sg
WEBSITE: www.unopal.com.sg

Metal Barrel-M30

Mechanical Drawing

Drawing 1

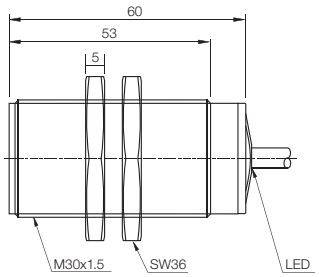

Drawing 2

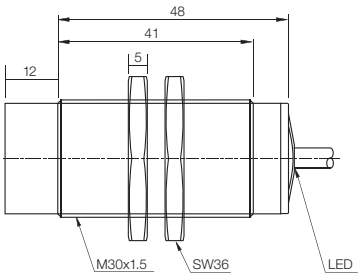

Drawing 3

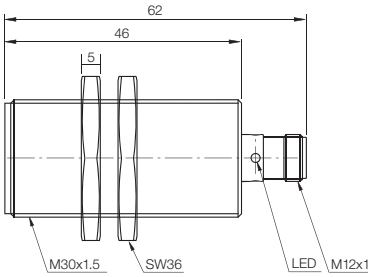

Drawing 4

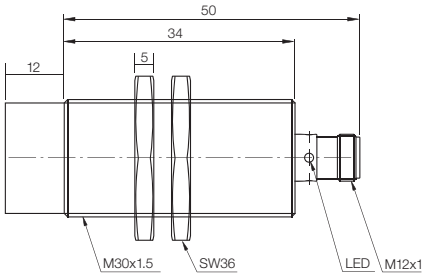

Approvals
Certificates

This edition replaces all previous issues. Availability, errors and specification subject to change without notice.

UNOPAL PRIVATE LIMITED
8, UBI ROAD 2, #06-20, ZERVEX
SINGAPORE 408538

TEL: +65-6747 0083
FAX: +65-6747 6041

EMAIL: unopal@singnet.com.sg
WEBSITE: www.unopal.com.sg

Metal Barrel-M30

General Data

- Metal housing
- Threaded barrel M30x1,5
- DC 4-wire
- Function display LED
- Degree of protection IP67
- Standard size
- Flush/non flush mounting
- Varied output function

Technical Data

Type	Rated operating distance S_n	Mounting	Output function	Output type	Voltage-range U_B	Rated current	Switching frequency	Ambient temperature	Connection	Mechanical Drawing
Fi10-M30-BP6L	10mm	flush	NO+NC	PNP	10…30VDC	≤200mA	500Hz	-25…70°C	2m cable	1
Fi10-M30-BN6L	10mm	flush	NO+NC	NPN	10…30VDC	≤200mA	500Hz	-25…70°C	2m cable	1
Ni15-M30-BP6L	15mm	non flush	NO+NC	PNP	10…30VDC	≤200mA	300Hz	-25…70°C	2m cable	2
Ni15-M30-BN6L	15mm	non flush	NO+NC	NPN	10…30VDC	≤200mA	300Hz	-25…70°C	2m cable	2
Fi10-M30-BP6L-Q12	10mm	flush	NO+NC	PNP	10…30VDC	≤200mA	500Hz	-25…70°C	M12 connector	3
Fi10-M30-BN6L-Q12	10mm	flush	NO+NC	NPN	10…30VDC	≤200mA	500Hz	-25…70°C	M12 connector	3
Ni15-M30-BP6L-Q12	15mm	non flush	NO+NC	PNP	10…30VDC	≤200mA	300Hz	-25…70°C	M12 connector	4
Ni15-M30-BN6L-Q12	15mm	non flush	NO+NC	NPN	10…30VDC	≤200mA	300Hz	-25…70°C	M12 connector	4

Connection Diagram

Bu = blue; Bn = brown; Bk = black; Wh = white; (1-4) = Connector pin M12

Cable

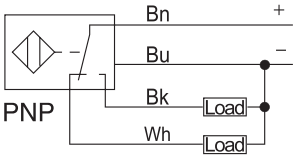

2 NC/4 NO

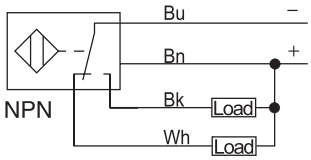

2 NC/4 NO

Connector

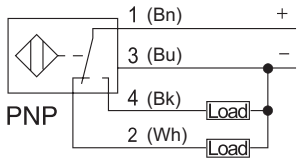

2 NC/4 NO

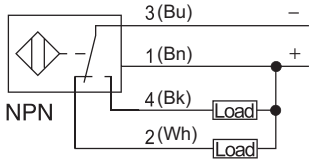

2 NC/4 NO

Approvals Certificates

CE

This edition replaces all previous issues. Availability, errors and specification subject to change without notice.

UNOPAL PRIVATE LIMITED
8, UBI ROAD 2, #06-20, ZERVEX
SINGAPORE 408538

TEL: +65-6747 0083
FAX: +65-6747 6041

EMAIL: unopal@singnet.com.sg
WEBSITE: www.unopal.com.sg

Metal Barrel-M30

Mechanical Drawing

Drawing 1

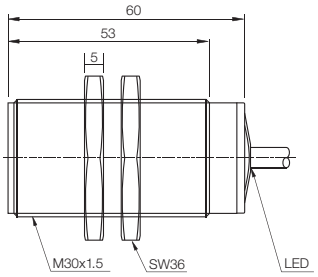

Drawing 2

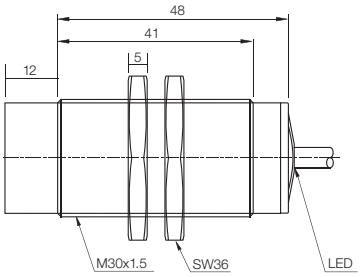

Drawing 3

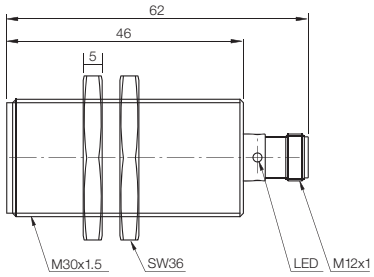

Drawing 4

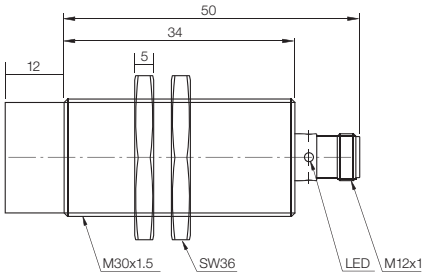

Approvals
Certificates

This edition replaces all previous issues. Availability, errors and specification subject to change without notice.

UNOPAL PRIVATE LIMITED
8, UBI ROAD 2, #06-20, ZERVEX
SINGAPORE 408538

TEL: +65-6747 0083
FAX: +65-6747 6041

EMAIL: unopal@singnet.com.sg
WEBSITE: www.unopal.com.sg

Metal Barrel-M30

General Data

- Metal housing
- Threaded barrel M30x1,5
- AC 2-wire
- Function display LED
- Degree of protection IP67
- Standard size
- Flush/non flush mounting
- Wide voltage range

Technical Data

Type	Rated operating distance S_n	Mounting	Output function	Output type	Voltage-range U_B	Rated current	Switching frequency	Ambient temperature	Connection	Mechanical Drawing
Fi10-M30-OSA3L	10mm	flush	NO	AC	20…250VAC	≤300mA	20Hz	-25…70°C	2m cable	1
Fi10-M30-CSA3L	10mm	flush	NC	AC	20…250VAC	≤300mA	20Hz	-25…70°C	2m cable	1
Ni15-M30-OSA3L	15mm	non flush	NO	AC	20…250VAC	≤300mA	20Hz	-25…70°C	2m cable	2
Ni15-M30-CSA3L	15mm	non flush	NC	AC	20…250VAC	≤300mA	20Hz	-25…70°C	2m cable	2
Fi10-M30-OSA3L-Q12	10mm	flush	NO	AC	20…250VAC	≤300mA	20Hz	-25…70°C	M12 connector	3
Fi10-M30-CSA3L-Q12	10mm	flush	NC	AC	20…250VAC	≤300mA	20Hz	-25…70°C	M12 connector	3
Ni15-M30-OSA3L-Q12	15mm	non flush	NO	AC	20…250VAC	≤300mA	20Hz	-25…70°C	M12 connector	4
Ni15-M30-CSA3L-Q12	15mm	non flush	NC	AC	20…250VAC	≤300mA	20Hz	-25…70°C	M12 connector	4

Connection Diagram

Bu = blue; Bn = brown; Bk = black; Wh = white; (1-4) = Connector pin M12

Cable

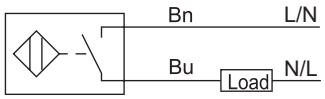

AC-2 wire NO

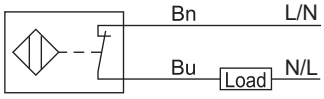

AC-2 wire NC

Connector

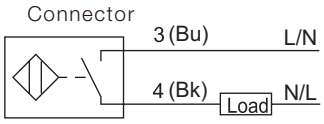

AC-2 wire NO

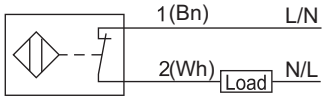

AC-2 wire NC

Approvals Certificates

CE

This edition replaces all previous issues. Availability, errors and specification subject to change without notice.

UNOPAL PRIVATE LIMITED
8, UBI ROAD 2, #06-20, ZERVEX
SINGAPORE 408538

TEL: +65-6747 0083
FAX: +65-6747 6041

EMAIL: unopal@singnet.com.sg
WEBSITE: www.unopal.com.sg

Metal Barrel-M30

Mechanical Drawing

Drawing 1

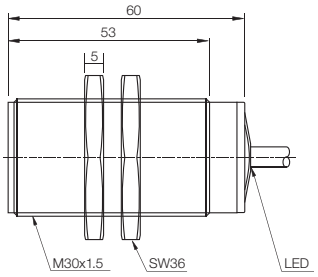

Drawing 2

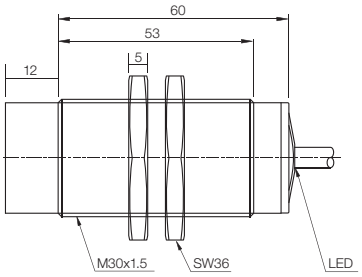

Drawing 3

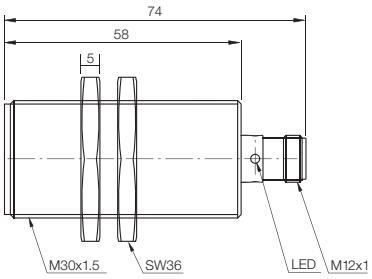

Drawing 4

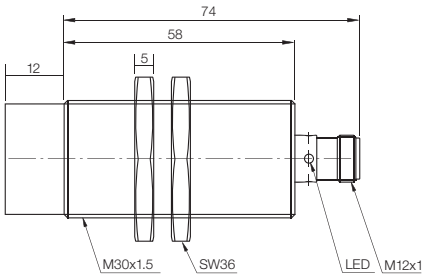

Approvals
Certificates

This edition replaces all previous issues. Availability, errors and specification subject to change without notice.

UNOPAL PRIVATE LIMITED
8, UBI ROAD 2, #06-20, ZERVEX
SINGAPORE 408538

TEL: +65-6747 0083
FAX: +65-6747 6041

EMAIL: unopal@singnet.com.sg
WEBSITE: www.unopal.com.sg

Metal Barrel-M30

General Data

- Metal housing
- Threaded barrel M30x1,5
- AC/DC 2-wire
- Function display LED
- Degree of protection IP67
- Standard size
- Flush/non flush mounting
- Wide voltage range

Technical Data

Type	Rated operating distance S_n	Mounting	Output function	Output type	Voltage-range U_B	Rated current	Switching frequency AC // DCz	Ambient temperature	Connection	Mechanical Drawing
Fi10-M30-0A41L	10mm	flush	NO	AC/DC	20…250VAC/DC	≤300mA	15Hz//50Hz	-25…85°C	2m cable	1
Fi10-M30-CA41L	10mm	flush	NC	AC/DC	20…250VAC/DC	≤300mA	15Hz//50Hz	-25…85°C	2m cable	1
Ni15-M30-0A41L	15mm	non flush	NO	AC/DC	20…250VAC/DC	≤300mA	15Hz//50Hz	-25…85°C	2m cable	2
Ni15-M30-CA41L	15mm	non flush	NC	AC/DC	20…250VAC/DC	≤300mA	15Hz//50Hz	-25…85°C	2m cable	2
Fi10-M30-0A41L-Q12	10mm	flush	NO	AC/DC	20…250VAC/DC	≤300mA	15Hz//50Hz	-25…85°C	M12 connector	3
Fi10-M30-CA41L-Q12	10mm	flush	NC	AC/DC	20…250VAC/DC	≤300mA	15Hz//50Hz	-25…85°C	M12 connector	3
Ni15-M30-0A41L-Q12	15mm	non flush	NO	AC/DC	20…250VAC/DC	≤300mA	15Hz//50Hz	-25…85°C	M12 connector	4
Ni15-M30-CA41L-Q12	15mm	non flush	NC	AC/DC	20…250VAC/DC	≤300mA	15Hz//50Hz	-25…85°C	M12 connector	4

Connection Diagram

Bu = blue; Bn = brown; Bk = black; Wh = white; (1-4) = Connector pin M12

Cable

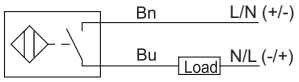

AC/DC-2 wire NO

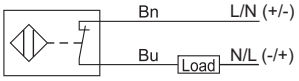

AC/DC-2 wire NC

Connector

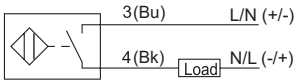

AC/DC-2 wire NO

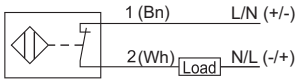

AC/DC-2 wire NC

Approvals Certificates

CE

This edition replaces all previous issues. Availability, errors and specification subject to change without notice.

UNOPAL PRIVATE LIMITED
8, UBI ROAD 2, #06-20, ZERVEX
SINGAPORE 408538

TEL: +65-6747 0083
FAX: +65-6747 6041

EMAIL: unopal@singnet.com.sg
WEBSITE: www.unopal.com.sg

Metal Barrel-M30

Mechanical Drawing

Drawing 1

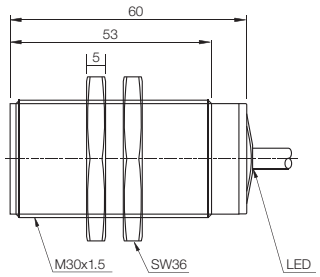

Drawing 2

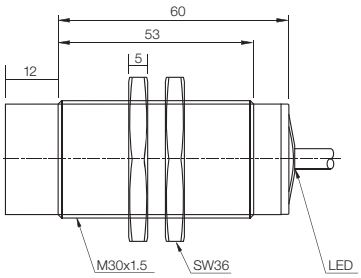

Drawing 3

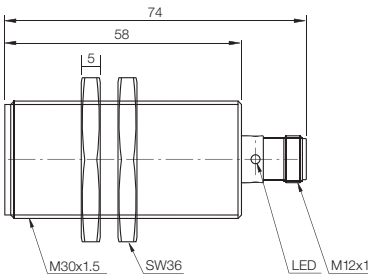

Drawing 4

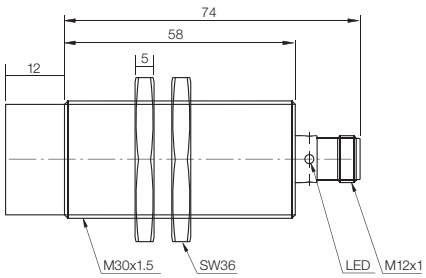

Approvals
Certificates

This edition replaces all previous issues. Availability, errors and specification subject to change without notice.

UNOPAL PRIVATE LIMITED
8, UBI ROAD 2, #06-20, ZERVEX
SINGAPORE 408538

TEL: +65-6747 0083
FAX: +65-6747 6041

EMAIL: unopal@singnet.com.sg
WEBSITE: www.unopal.com.sg

Plastic Rectangular-Q18

General Data

- Plastic housing
- Miniature rectangular 18x18mm
- DC/AC 2-wire
- Function display LED
- Degree of protection IP67
- Flush/non flush mounting
- Slot hole mounting
- Wide voltage range

Technical Data

Type	Rated operating distance S_n	Mounting	Output function	Output type	Voltage-range U_B	Rated current	Switching frequency	Ambient temperature	Connection	Mechanical Drawing
Fi5-Q18-OD6L	5mm	flush	NO	DC	10…30VDC	≤100mA	800Hz	-25…70°C	2m cable	1
Fi5-Q18-CD6L	5mm	flush	NC	DC	10…30VDC	≤100mA	800Hz	-25…70°C	2m cable	1
Fi5-Q18-OSA3L	5mm	flush	NO	AC	20…250VAC	≤200mA	20Hz	-25…70°C	2m cable	1
Fi5-Q18-CSA3L	5mm	flush	NC	AC	20…250VAC	≤200mA	20Hz	-25…70°C	2m cable	1
Ni8-Q18-OD6L	8mm	non flush	NO	DC	10…30VDC	≤100mA	800Hz	-25…70°C	2m cable	1
Ni8-Q18-CD6L	8mm	non flush	NC	DC	10…30VDC	≤100mA	800Hz	-25…70°C	2m cable	1
Ni8-Q18-OSA3L	8mm	non flush	NO	AC	20…250VAC	≤200mA	20Hz	-25…70°C	2m cable	1
Ni8-Q18-CSA3L	8mm	non flush	NC	AC	20…250VAC	≤200mA	20Hz	-25…70°C	2m cable	1
Fi5-Q18-OA41L	5mm	flush	NO	AC/DC	20…250VAC/DC	≤100mA	20Hz	-25…70°C	2m cable	1
Fi5-Q18-CA41L	5mm	flush	NC	AC/DC	20…250VAC/DC	≤100mA	20Hz	-25…70°C	2m cable	1
Ni8-Q18-OA41L	8mm	non flush	NO	AC/DC	20…250VAC/DC	≤200mA	20Hz	-25…70°C	2m cable	1
Ni8-Q18-CA41L	8mm	non flush	NC	AC/DC	20…250VAC/DC	≤200mA	20Hz	-25…70°C	2m cable	1

Connection Diagram

Bu = blue; Bn = brown; Bk = black; Wh = white; (1-4) = Connector pin M12

Cable

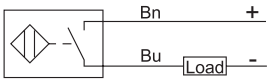

DC-2 wire NO

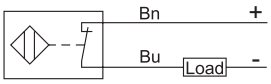

DC-2 wire NC

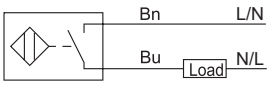

AC-2 wire NO

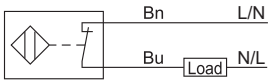

AC-2 wire NC

Cable

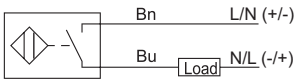

AC/DC-2 wire NO

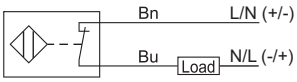

AC/DC-2 wire NC

Mechanical Drawing

Drawing 1

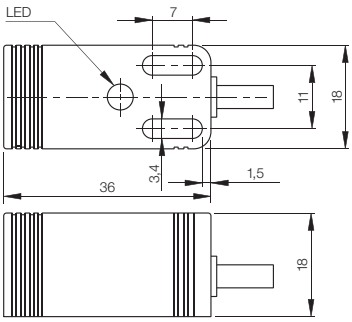

Approvals
Certificates

CE

This edition replaces all previous issues. Availability, errors and specification subject to change without notice.

UNOPAL PRIVATE LIMITED
8, UBI ROAD 2, #06-20, ZERVEX
SINGAPORE 408538

TEL: +65-6747 0083
FAX: +65-6747 6041

EMAIL: unopal@singnet.com.sg
WEBSITE: www.unopal.com.sg

Plastic Rectangular-Q18

General Data

- Plastic housing
- Miniature rectangular 18x18mm
- DC 3-wire
- Function display LED
- Degree of protection IP67
- Flush/non flush mounting
- Slot hole mounting
- Varied output function

Technical Data

Type	Rated operating distance S_n	Mounting	Output function	Output type	Voltage-range U_B	Rated current	Switching frequency	Ambient temperature	Connection	Mechanical Drawing
Fi5-Q18-OP6L	5mm	flush	NO	PNP	10…30VDC	≤200mA	1000Hz	-25…70°C	2m cable	1
Fi5-Q18-ON6L	5mm	flush	NO	NPN	10…30VDC	≤200mA	1000Hz	-25…70°C	2m cable	1
Fi5-Q18-CP6L	5mm	flush	NC	PNP	10…30VDC	≤200mA	1000Hz	-25…70°C	2m cable	1
Fi5-Q18-CN6L	5mm	flush	NC	NPN	10…30VDC	≤200mA	1000Hz	-25…70°C	2m cable	1
Ni8-Q18-OP6L	8mm	non flush	NO	PNP	10…30VDC	≤200mA	1000Hz	-25…70°C	2m cable	1
Ni8-Q18-ON6L	8mm	non flush	NO	NPN	10…30VDC	≤200mA	1000Hz	-25…70°C	2m cable	1
Ni8-Q18-CP6L	8mm	non flush	NC	PNP	10…30VDC	≤200mA	1000Hz	-25…70°C	2m cable	1
Ni8-Q18-CN6L	8mm	non flush	NC	NPN	10…30VDC	≤200mA	1000Hz	-25…70°C	2m cable	1

Connection Diagram

Bu = blue; Bn = brown; Bk = black; Wh = white; (1-4) = Connector pin M12

Cable

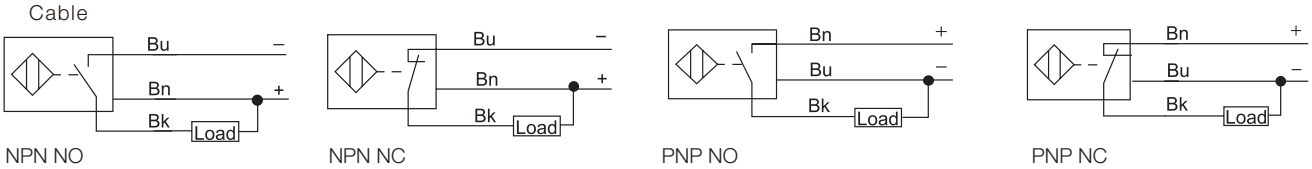

Mechanical Drawing

Drawing 1

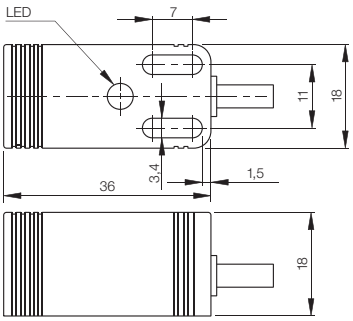

Approvals Certificates

CE

This edition replaces all previous issues. Availability, errors and specification subject to change without notice.

UNOPAL PRIVATE LIMITED
8, UBI ROAD 2, #06-20, ZERVEX
SINGAPORE 408538

TEL: +65-6747 0083
FAX: +65-6747 6041

EMAIL: unopal@singnet.com.sg
WEBSITE: www.unopal.com.sg

Plastic Rectangular-Q25

General Data

- Plastic housing
- Miniature rectangular 25 x 25 mm
- DC/AC 2-wire
- Function display LED
- Degree of protection IP67
- Flush/non flush mounting
- Large sensing range
- Wide voltage range

Technical Data

Type	Rated operating distance S_n	Mounting	Output function	Output type	Voltage-range U_B	Rated current	Switching frequency	Ambient temperature	Connection	Mechanical Drawing
Fi7-Q25-OD6L	7mm	flush	NO	DC	10…30VDC	≤100mA	600Hz	-25…70°C	2m cable	1
Fi7-Q25-CD6L	7mm	flush	NC	DC	10…30VDC	≤100mA	600Hz	-25…70°C	2m cable	1
Fi7-Q25-OSA3L	7mm	flush	NO	AC	20…250VAC	≤300mA	20Hz	-25…70°C	2m cable	1
Fi7-Q25-CSA3L	7mm	flush	NC	AC	20…250VAC	≤300mA	20Hz	-25…70°C	2m cable	1
Ni10-Q25-OD6L	10mm	non flush	NO	DC	10…30VDC	≤100mA	600Hz	-25…70°C	2m cable	1
Ni10-Q25-CD6L	10mm	non flush	NC	DC	10…30VDC	≤100mA	600Hz	-25…70°C	2m cable	1
Ni10-Q25-OSA3L	10mm	non flush	NO	AC	20…250VAC	≤300mA	20Hz	-25…70°C	2m cable	1
Ni10-Q25-CSA3L	10mm	non flush	NC	AC	20…250VAC	≤300mA	20Hz	-25…70°C	2m cable	1
Fi7-Q25-OA41L	7mm	flush	NO	AC/DC	20…250VAC/DC	≤100mA	20Hz	-25…70°C	2m cable	1
Fi7-Q25-CA41L	7mm	flush	NC	AC/DC	20…250VAC/DC	≤100mA	20Hz	-25…70°C	2m cable	1
Ni10-Q25-OA41L	10mm	non flush	NO	AC/DC	20…250VAC/DC	≤300mA	20Hz	-25…70°C	2m cable	1
Ni10-Q25-CA41L	10mm	non flush	NC	AC/DC	20…250VAC/DC	≤300mA	20Hz	-25…70°C	2m cable	1

Connection Diagram

Bu = blue; Bn = brown; Bk = black; Wh = white; (1-4) = Connector pin M12

Cable

DC-2 wire NO | DC-2 wire NC | AC-2 wire NO | AC-2 wire NC

Cable

AC/DC-2 wire NO | AC/DC-2 wire NC

Mechanical Drawing

Drawing 1

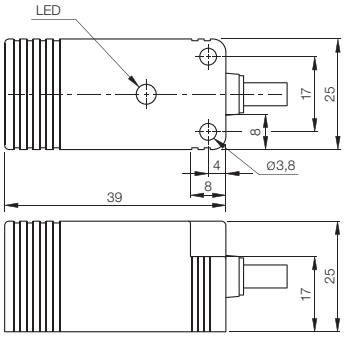

Approvals
Certificates

CE

This edition replaces all previous issues. Availability, errors and specification subject to change without notice.

UNOPAL PRIVATE LIMITED
8, UBI ROAD 2, #06-20, ZERVEX
SINGAPORE 408538

TEL: +65-6747 0083
FAX: +65-6747 6041

EMAIL: unopal@singnet.com.sg
WEBSITE: www.unopal.com.sg

Plastic Rectangular-Q25

General Data

- Plastic housing
- Miniature rectangular 25x25mm
- DC 3-wire
- Function display LED
- Degree of protection IP67
- Flush/non flush mounting
- Large sensing range
- Varied output function

Technical Data

Type	Rated operating distance S_n	Mounting	Output function	Output type	Voltage-range U_B	Rated current	Switching frequency	Ambient temperature	Connection	Mechanical Drawing
Fi7-Q25-OP6L	7mm	flush	NO	PNP	10…30VDC	≤200mA	700Hz	-25…70°C	2m cable	1
Fi7-Q25-ON6L	7mm	flush	NO	NPN	10…30VDC	≤200mA	700Hz	-25…70°C	2m cable	1
Fi7-Q25-CP6L	7mm	flush	NC	PNP	10…30VDC	≤200mA	700Hz	-25…70°C	2m cable	1
Fi7-Q25-CN6L	7mm	flush	NC	NPN	10…30VDC	≤200mA	700Hz	-25…70°C	2m cable	1
Ni10-Q25-OP6L	10mm	non flush	NO	PNP	10…30VDC	≤200mA	700Hz	-25…70°C	2m cable	1
Ni10-Q25-ON6L	10mm	non flush	NO	NPN	10…30VDC	≤200mA	700Hz	-25…70°C	2m cable	1
Ni10-Q25-CP6L	10mm	non flush	NC	PNP	10…30VDC	≤200mA	700Hz	-25…70°C	2m cable	1
Ni10-Q25-CN6L	10mm	non flush	NC	NPN	10…30VDC	≤200mA	700Hz	-25…70°C	2m cable	1

Connection Diagram

Bu = blue; Bn = brown; Bk = black; Wh = white; (1-4) = Connector pin M12

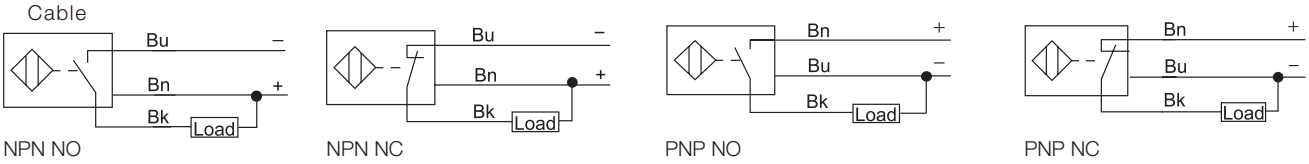

Drawing 1

Mechanical Drawing

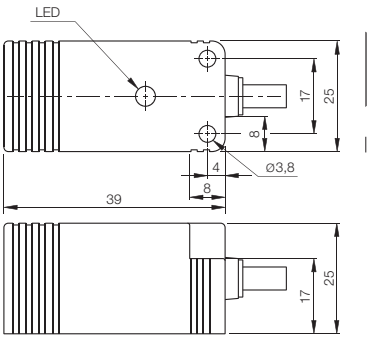

Approvals Certificates

CE

UNOPAL PRIVATE LIMITED
8, UBI ROAD 2, #06-20, ZERVEX
SINGAPORE 408538

TEL: +65-6747 0083
FAX: +65-6747 6041

EMAIL: unopal@singnet.com.sg
WEBSITE: www.unopal.com.sg

This edition replaces all previous issues. Availability, errors and specification subject to change without notice.

Plastic Rectangular-Q30

General Data

- Plastic housing
- Miniature rectangular 30x30mm
- DC/AC 2-wire
- Function display LED
- Degree of protection IP67
- Flush/non flush mounting
- Large sensing range
- Wide voltage range

Technical Data

Type	Rated operating distance S_n	Mounting	Output function	Output type	Voltage-range U_B	Rated current	Switching frequency	Ambient temperature	Connection	Mechanical Drawing
Fi10-Q30-OD6L	10mm	flush	NO	DC	10…30VDC	≤100mA	500Hz	-25…70°C	2m cable	1
Fi10-Q30-CD6L	10mm	flush	NC	DC	10…30VDC	≤100mA	500Hz	-25…70°C	2m cable	1
Fi10-Q30-OSA3L	10mm	flush	NO	AC	20…250VAC	≤300mA	20Hz	-25…70°C	2m cable	1
Fi10-Q30-CSA3L	10mm	flush	NC	AC	20…250VAC	≤300mA	20Hz	-25…70°C	2m cable	1
Ni15-Q30-OD6L	15mm	non flush	NO	DC	10…30VDC	≤100mA	500Hz	-25…70°C	2m cable	1
Ni15-Q30-CD6L	15mm	non flush	NC	DC	10…30VDC	≤100mA	500Hz	-25…70°C	2m cable	1
Ni15-Q30-OSA3L	15mm	non flush	NO	AC	20…250VAC	≤300mA	20Hz	-25…70°C	2m cable	1
Ni15-Q30-CSA3L	15mm	non flush	NC	AC	20…250VAC	≤300mA	20Hz	-25…70°C	2m cable	1
Fi10-Q30-OA41L	10mm	flush	NO	DC/AC	20…250VDC/AC	≤300mA	20Hz	-25…70°C	2m cable	1
Fi10-Q30-CA41L	10mm	flush	NC	DC/AC	20…250VDC/AC	≤300mA	20Hz	-25…70°C	2m cable	1
Ni15-Q30-OA41L	15mm	non flush	NO	DC/AC	20…250VDC/AC	≤300mA	20Hz	-25…70°C	2m cable	1
Ni15-Q30-CA41L	15mm	non flush	NC	DC/AC	20…250VDC/AC	≤300mA	20Hz	-25…70°C	2m cable	1

Connection Diagram

Bu = blue; Bn = brown; Bk = black; Wh = white; (1-4) = Connector pin M12

Cable

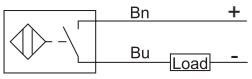

DC-2 wire NO

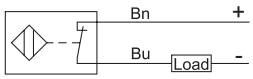

DC-2 wire NC

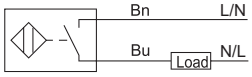

AC-2 wire NO

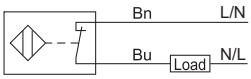

AC-2 wire NC

Cable

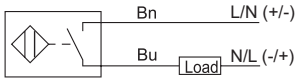

AC/DC-2 wire NO

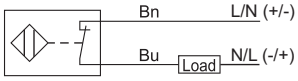

AC/DC-2 wire NC

Mechanical Drawing

Drawing 1

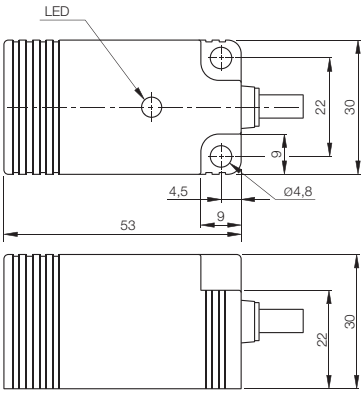

Approvals Certificates

CE

This edition replaces all previous issues. Availability, errors and specification subject to change without notice.

UNOPAL PRIVATE LIMITED
8, UBI ROAD 2, #06-20, ZERVEX
SINGAPORE 408538

TEL: +65-6747 0083
FAX: +65-6747 6041

EMAIL: unopal@singnet.com.sg
WEBSITE: www.unopal.com.sg

Plastic Rectangular-Q30

General Data

- Plastic housing
- Miniature rectangular 30x30mm
- DC 3-wire
- Function display LED
- Degree of protection IP67
- Flush/non flush mounting
- Large sensing range
- Varied output function

Technical Data

Type	Rated operating distance S_n	Mounting	Output function	Output type	Voltage-range U_B	Rated current	Switching frequency	Ambient temperature	Connection	Mechanical Drawing
Fi10-Q30-OP6L	10mm	flush	NO	PNP	10…30VDC	≤200mA	500Hz	-25…70°C	2m cable	1
Fi10-Q30-ON6L	10mm	flush	NO	NPN	10…30VDC	≤200mA	500Hz	-25…70°C	2m cable	1
Fi10-Q30-CP6L	10mm	flush	NC	PNP	10…30VDC	≤200mA	500Hz	-25…70°C	2m cable	1
Fi10-Q30-CN6L	10mm	flush	NC	NPN	10…30VDC	≤200mA	500Hz	-25…70°C	2m cable	1
Ni15-Q30-OP6L	15mm	non flush	NO	PNP	10…30VDC	≤200mA	500Hz	-25…70°C	2m cable	1
Ni15-Q30-ON6L	15mm	non flush	NO	NPN	10…30VDC	≤200mA	500Hz	-25…70°C	2m cable	1
Ni15-Q30-CP6L	15mm	non flush	NC	PNP	10…30VDC	≤200mA	500Hz	-25…70°C	2m cable	1
Ni15-Q30-CN6L	15mm	non flush	NC	NPN	10…30VDC	≤200mA	500Hz	-25…70°C	2m cable	1

Connection Diagram

Bu = blue; Bn = brown; Bk = black; Wh = white; (1-4) = Connector pin M12

Cable

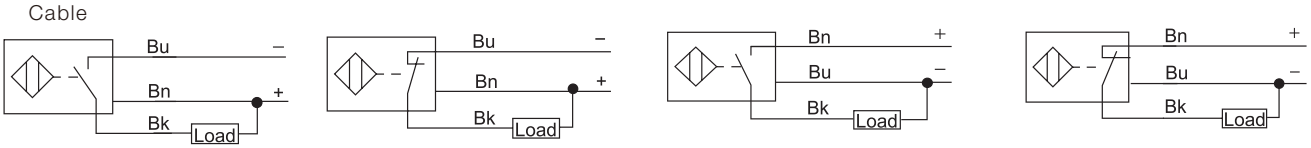

NPN NO NPN NC PNP NO PNP NC

Mechanical Drawing

Drawing 1

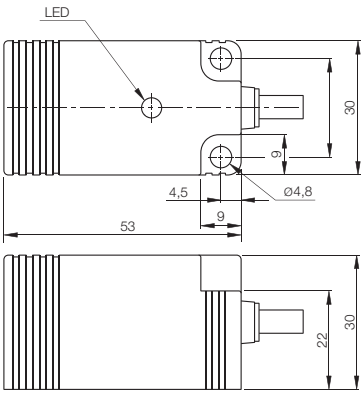

Approvals Certificates

CE

This edition replaces all previous issues. Availability, errors and specification subject to change without notice.

UNOPAL PRIVATE LIMITED
8, UBI ROAD 2, #06-20, ZERVEX
SINGAPORE 408538

TEL: +65-6747 0083
FAX: +65-6747 6041

EMAIL: unopal@singnet.com.sg
WEBSITE: www.unopal.com.sg

Plastic Rectangular-W40

General Data

- Plastic housing
- Rectangular 40 x 40 mm
- DC 2-wire
- 2 function display LED's
- Degree of protection IP67
- Unified connection
- Variable orientation of the active

Technical Data

Type	Rated operating distance S_n	Mounting	Output function	Output type	Voltage-range U_B	Rated current	Switching frequency	Ambient temperature	Connection	Mechanical Drawing
Fi20-W40-OD9L-Q12	20 mm	flush	NO	DC	10…60 VDC	≤ 200 mA	150 Hz	-25…70 °C	M12 connector	1
Ni30-W40-OD9L-Q12	30 mm	non flush	NO	DC	10…60 VDC	≤ 200 mA	150 Hz	-25…70 °C	M12 connector	1
Fi20-W40-CD9L-Q12	20 mm	flush	NC	DC	10…60 VDC	≤ 200 mA	150 Hz	-25…70 °C	M12 connector	1
Ni30-W40-CD9L-Q12	30 mm	non flush	NC	DC	10…60 VDC	≤ 200 mA	150 Hz	-25…70 °C	M12 connector	1

Connection Diagram

Bu = blue; Bn = brown; Bk = black; Wh = white; (1-4) = Connector pin M12

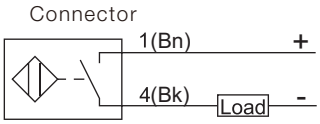

DC-2 wire NO

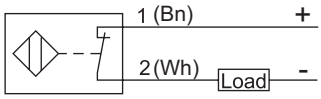

DC-2 wire NC

Mechanical Drawing

Drawing 1

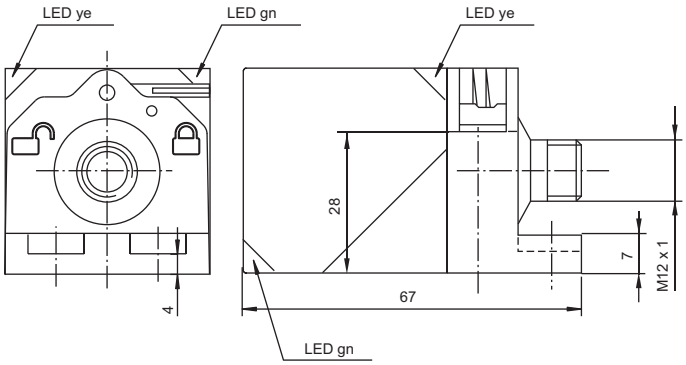

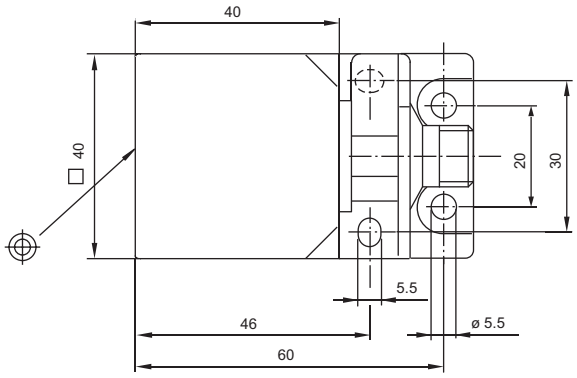

Approvals
Certificates

CE

This edition replaces all previous issues. Availability, errors and specification subject to change without notice.

UNOPAL PRIVATE LIMITED
8, UBI ROAD 2, #06-20, ZERVEX
SINGAPORE 408538

TEL: +65-6747 0083
FAX: +65-6747 6041

EMAIL: unopal@singnet.com.sg
WEBSITE: www.unopal.com.sg

Plastic Rectangular-W40

General Data

- Plastic housing
- Rectangular 40 x 40 mm
- DC 3-wire
- 2 function display LED's
- Degree of protection IP67
- Unified connection
- Variable orientation of the active

Technical Data

Type	Rated operating distance S_n	Mounting	Output function	Output type	Voltage-range U_B	Rated current	Switching frequency	Ambient temperature	Connection	Mechanical Drawing
Fi20-W40-ON6L-Q12	20 mm	flush	NO	NPN	10…30 VDC	≤ 200 mA	150 Hz	-25…70 °C	M12 connector	1
Fi20-W40-CN6L-Q12	20 mm	flush	NC	NPN	10…30 VDC	≤ 200 mA	150 Hz	-25…70 °C	M12 connector	1
Fi20-W40-BN6L-Q12	20 mm	flush	NO+NC	NPN	10…30 VDC	≤ 200 mA	150 Hz	-25…70 °C	M12 connector	1
Fi20-W40-OP6L-Q12	20 mm	flush	NO	PNP	10…30 VDC	≤ 200 mA	150 Hz	-25…70 °C	M12 connector	1
Fi20-W40-CP6L-Q12	20 mm	flush	NC	PNP	10…30 VDC	≤ 200 mA	150 Hz	-25…70 °C	M12 connector	1
Fi20-W40-BP6L-Q12	20 mm	flush	NO+NC	PNP	10…30 VDC	≤ 200 mA	150 Hz	-25…70 °C	M12 connector	1
Ni30-W40-ON6L-Q12	30 mm	non flush	NO	NPN	10…30 VDC	≤ 200 mA	150 Hz	-25…70 °C	M12 connector	1
Ni30-W40-CN6L-Q12	30 mm	non flush	NC	NPN	10…30 VDC	≤ 200 mA	150 Hz	-25…70 °C	M12 connector	1
Ni30-W40-BN6L-Q12	30 mm	non flush	NO+NC	NPN	10…30 VDC	≤ 200 mA	150 Hz	-25…70 °C	M12 connector	1
Ni30-W40-OP6L-Q12	30 mm	non flush	NO	PNP	10…30 VDC	≤ 200 mA	150 Hz	-25…70 °C	M12 connector	1
Ni30-W40-CP6L-Q12	30 mm	non flush	NC	PNP	10…30 VDC	≤ 200 mA	150 Hz	-25…70 °C	M12 connector	1
Ni30-W40-BP6L-Q12	20 mm	non flush	NO+NC	PNP	10…30 VDC	≤ 200 mA	150 Hz	-25…70 °C	M12 connector	1

Connection Diagram

Bu = blue; Bn = brown; Bk = black; Wh = white; (1-4) = Connector pin M12

Connector

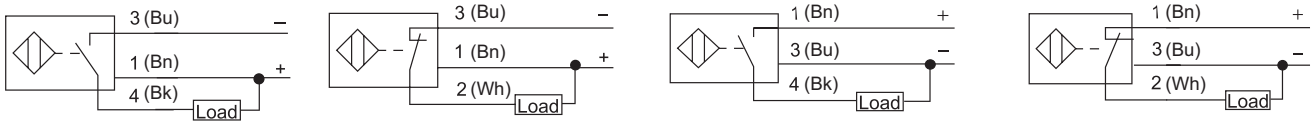

NPN NO | NPN NC | PNP NO | PNP NC

2 NC/4 NO | 2 NC/4 NO

Mechanical Drawing

Drawing 1

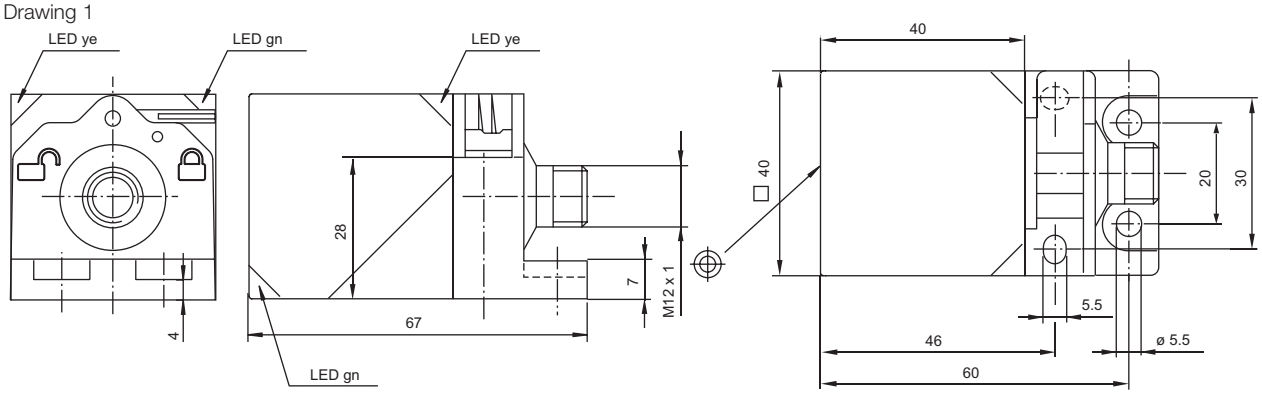

Approvals Certificates

CE

This edition replaces all previous issues. Availability, errors and specification subject to change without notice.

UNOPAL PRIVATE LIMITED
8, UBI ROAD 2, #06-20, ZERVEX
SINGAPORE 408538

TEL: +65-6747 0083
FAX: +65-6747 6041

EMAIL: unopal@singnet.com.sg
WEBSITE: www.unopal.com.sg

Plastic Rectangular-W40

General Data

- Plastic housing
- Rectangular 40 x 40 mm
- AC/DC 2-wire
- 2 function display LED's
- Degree of protection IP67
- Unified connection
- Variable orientation of the active

Technical Data

Type	Rated operating distance S_n	Mounting	Output function	Output type	Voltage-range U_B	Rated current	Switching frequency	Ambient temperature	Connection	Mechanical Drawing
Fi20-W40-0A41L-Q12	20 mm	flush	NO	AC/DC	20…240 VAC/DC	≤ 200 mA	20 Hz	-25…70 °C	M12 connector	1
Ni30-W40-CA41L-Q12	30 mm	non flush	NC	AC/DC	20…240 VAC/DC	≤ 200 mA	20 Hz	-25…70 °C	M12 connector	1

Connection Diagram

Bu = blue; Bn = brown; Bk = black; Wh = white; (1-4) = Connector pin M12

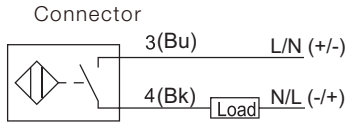

AC/DC-2 wire NO

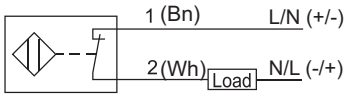

AC/DC-2 wire NC

Mechanical Drawing

Drawing 1

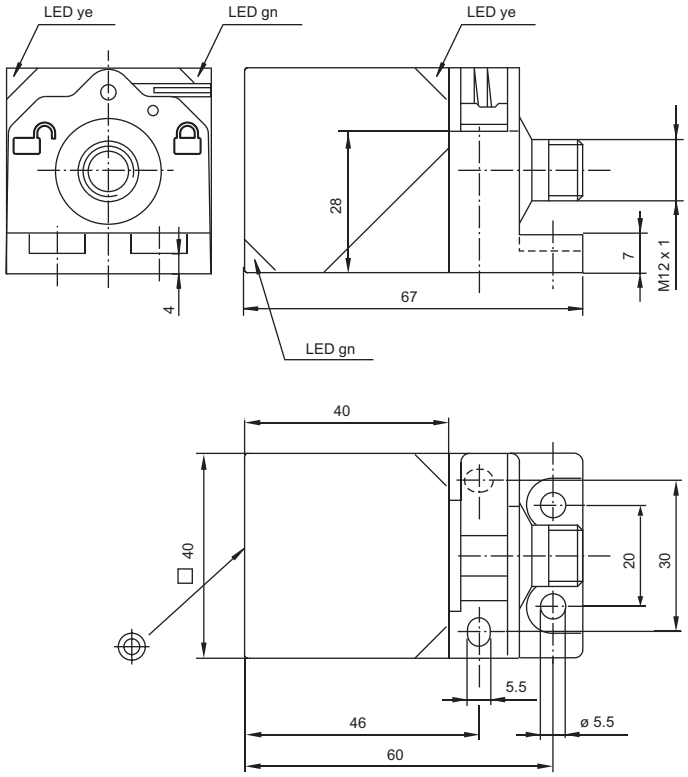

Approvals
Certificates

CE

This edition replaces all previous issues. Availability, errors and specification subject to change without notice.

UNOPAL PRIVATE LIMITED
8, UBI ROAD 2, #06-20, ZERVEX
SINGAPORE 408538

TEL: +65-6747 0083
FAX: +65-6747 6041

EMAIL: unopal@singnet.com.sg
WEBSITE: www.unopal.com.sg

Plastic Rectangular-W80

General Data

- Plastic housing
- Rectangular 80x80mm
- DC 2-wire
- 2 function display LED's
- Degree of protection IP67
- Screw terminals or M12 connector
- Standardized mounting hole arrangement
- Wide voltage range

Technical Data

Type	Rated operating distance S_n	Mounting	Output function	Output type	Voltage-range U_B	Rated current	Switching frequency	Ambient temperature	Connection	Mechanical Drawing
Fi40-W80-OD9L-Q	40mm	flush	NO	DC	10…60VDC	≤200mA	100Hz	-25…70°C	Screw terminals	1
Ni50-W80-OD9L-Q	50mm	non flush	NO	DC	10…60VDC	≤200mA	100Hz	-25…70°C	Screw terminals	1
Fi40-W80-CD9L-Q	40mm	flush	NC	DC	10…60VDC	≤200mA	100Hz	-25…70°C	Screw terminals	1
Ni50-W80-CD9L-Q	50mm	non flush	NC	DC	10…60VDC	≤200mA	100Hz	-25…70°C	Screw terminals	1
Fi40-W80-OD9L-Q12	40mm	flush	NO	DC	10…60VDC	≤200mA	100Hz	-25…70°C	M12 connector	2
Ni50-W80-OD9L-Q12	50mm	non flush	NO	DC	10…60VDC	≤200mA	100Hz	-25…70°C	M12 connector	2
Fi40-W80-CD9L-Q12	40mm	flush	NC	DC	10…60VDC	≤200mA	100Hz	-25…70°C	M12 connector	2
Ni50-W80-CD9L-Q12	50mm	non flush	NC	DC	10…60VDC	≤200mA	100Hz	-25…70°C	M12 connector	2

Connection Diagram

Bu = blue; Bn = brown; Bk = black; Wh = white; (1-4) = Connector pin M12 / Terminals Nr.

Screw terminals/Connector

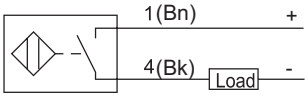

DC-2 wire NO

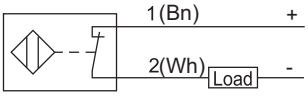

DC-2 wire NC

Mechanical Drawing

Drawing 1

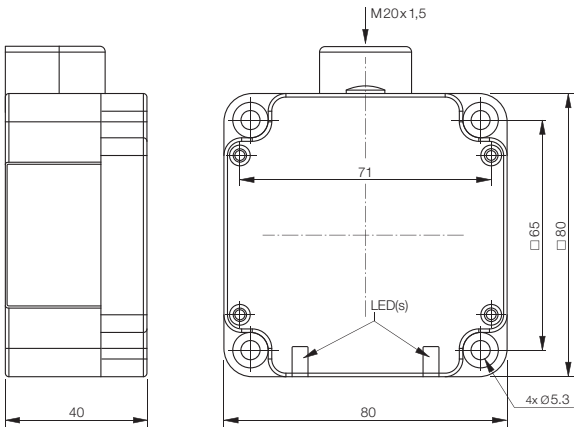

Drawing 2

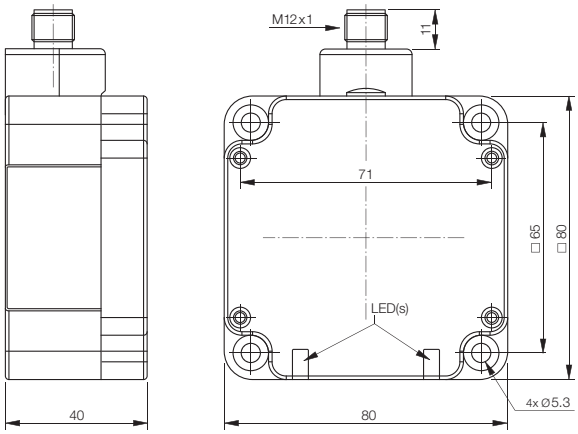

Approvals
Certificates

CE

This edition replaces all previous issues. Availability, errors and specification subject to change without notice.

UNOPAL PRIVATE LIMITED
8, UBI ROAD 2, #06-20, ZERVEX
SINGAPORE 408538

TEL: +65-6747 0083
FAX: +65-6747 6041

EMAIL: unopal@singnet.com.sg
WEBSITE: www.unopal.com.sg

Plastic Rectangular-W80

General Data

- Plastic housing
- Rectangular 80x80mm
- DC 3/4-wire
- 2 function display LED's
- Degree of protection IP67
- Screw terminals
- Standardized mounting hole arrangement

Technical Data

Type	Rated operating distance S_n	Mounting	Output function	Output type	Voltage-range U_B	Rated current	Switching frequency	Ambient temperature	Connection	Mechanical Drawing
Fi40-W80-ON6L-Q	40mm	flush	NO	NPN	10…30VDC	≤200mA	100Hz	-25…70°C	Screw terminals	1
Fi40-W80-CN6L-Q	40mm	flush	NC	NPN	10…30VDC	≤200mA	100Hz	-25…70°C	Screw terminals	1
Fi40-W80-BN6L-Q	40mm	flush	NO+NC	NPN	10…30VDC	≤200mA	100Hz	-25…70°C	Screw terminals	1
Fi40-W80-OP6L-Q	40mm	flush	NO	PNP	10…30VDC	≤200mA	100Hz	-25…70°C	Screw terminals	1
Fi40-W80-CP6L-Q	40mm	flush	NC	PNP	10…30VDC	≤200mA	100Hz	-25…70°C	Screw terminals	1
Fi40-W80-BP6L-Q	40mm	flush	NO+NC	PNP	10…30VDC	≤200mA	100Hz	-25…70°C	Screw terminals	1
Ni50-W80-ON6L-Q	50mm	non flush	NO	NPN	10…30VDC	≤200mA	100Hz	-25…70°C	Screw terminals	1
Ni50-W80-CN6L-Q	50mm	non flush	NC	NPN	10…30VDC	≤200mA	100Hz	-25…70°C	Screw terminals	1
Ni50-W80-BN6L-Q	50mm	non flush	NO+NC	NPN	10…30VDC	≤200mA	100Hz	-25…70°C	Screw terminals	1
Ni50-W80-OP6L-Q	50mm	non flush	NO	PNP	10…30VDC	≤200mA	100Hz	-25…70°C	Screw terminals	1
Ni50-W80-CP6L-Q	50mm	non flush	NC	PNP	10…30VDC	≤200mA	100Hz	-25…70°C	Screw terminals	1
Ni50-W80-BP6L-Q	50mm	non flush	NO+NC	PNP	10…30VDC	≤200mA	100Hz	-25…70°C	Screw terminals	1

Connection Diagram

Bu = blue; Bn = brown; Bk = black; Wh = white; (1-4) = Connector pin M12 / Terminals Nr.

Screw terminals

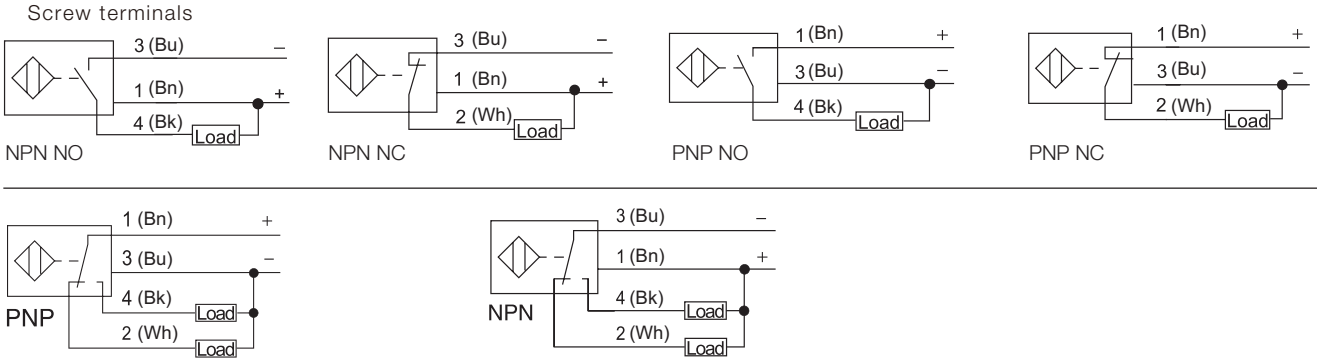

Mechanical Drawing

Drawing 1

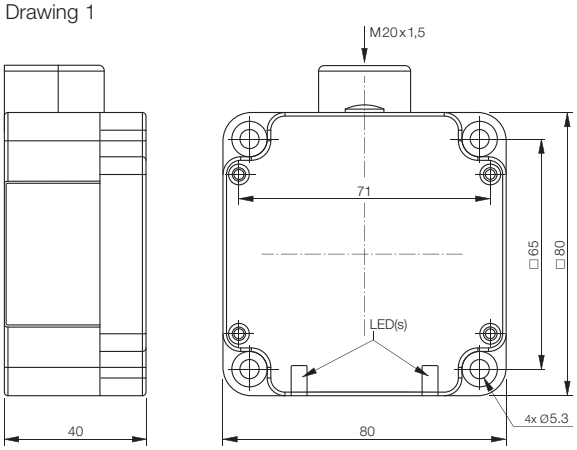

Approvals Certificates

CE

This edition replaces all previous issues. Availability, errors and specification subject to change without notice.

UNOPAL PRIVATE LIMITED
8, UBI ROAD 2, #06-20, ZERVEX
SINGAPORE 408538

TEL: +65-6747 0083
FAX: +65-6747 6041

EMAIL: unopal@singnet.com.sg
WEBSITE: www.unopal.com.sg

Plastic Rectangular-W80

General Data

- Plastic housing
- Rectangular 80 x 80 mm
- DC 3/4-wire
- 2 function display LED's
- Degree of protection IP67
- M12 connector wiring
- Standardized mounting hole arrangement

Technical Data

Type	Rated operating distance S_n	Mounting	Output function	Output type	Voltage-range U_B	Rated current	Switching frequency	Ambient temperature	Connection	Mechanical Drawing
Fi40-W80-ON6L-Q12	40 mm	flush	NO	NPN	10…30 VDC	≤200 mA	100 Hz	-25…70 °C	M12 connector	1
Fi40-W80-CN6L-Q12	40 mm	flush	NC	NPN	10…30 VDC	≤200 mA	100 Hz	-25…70 °C	M12 connector	1
Fi40-W80-BN6L-Q12	40 mm	flush	NO+NC	NPN	10…30 VDC	≤200 mA	100 Hz	-25…70 °C	M12 connector	1
Fi40-W80-OP6L-Q12	40 mm	flush	NO	PNP	10…30 VDC	≤200 mA	100 Hz	-25…70 °C	M12 connector	1
Fi40-W80-CP6L-Q12	40 mm	flush	NC	PNP	10…30 VDC	≤200 mA	100 Hz	-25…70 °C	M12 connector	1
Fi40-W80-BP6L-Q12	40 mm	flush	NO+NC	PNP	10…30 VDC	≤200 mA	100 Hz	-25…70 °C	M12 connector	1
Ni50-W80-ON6L-Q12	50 mm	non flush	NO	NPN	10…30 VDC	≤200 mA	100 Hz	-25…70 °C	M12 connector	1
Ni50-W80-CN6L-Q12	50 mm	non flush	NC	NPN	10…30 VDC	≤200 mA	100 Hz	-25…70 °C	M12 connector	1
Ni50-W80-BN6L-Q12	50 mm	non flush	NO+NC	NPN	10…30 VDC	≤200 mA	100 Hz	-25…70 °C	M12 connector	1
Ni50-W80-OP6L-Q12	50 mm	non flush	NO	PNP	10…30 VDC	≤200 mA	100 Hz	-25…70 °C	M12 connector	1
Ni50-W80-CP6L-Q12	50 mm	non flush	NC	PNP	10…30 VDC	≤200 mA	100 Hz	-25…70 °C	M12 connector	1
Ni50-W80-BP6L-Q12	50 mm	non flush	NO+NC	PNP	10…30 VDC	≤200 mA	100 Hz	-25…70 °C	M12 connector	1

Connection Diagram

Bu = blue; Bn = brown; Bk = black; Wh = white; (1-4) = Connector pin M12

Connector

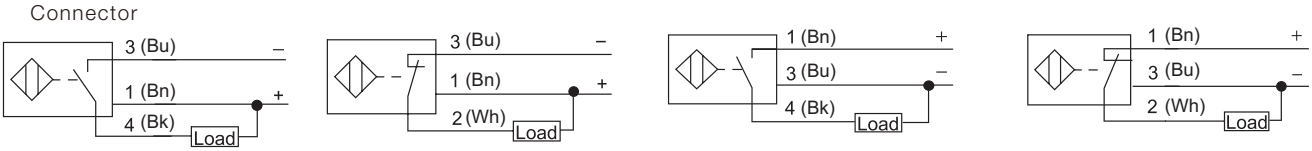

NPN NO | NPN NC | PNP NO | PNP NC

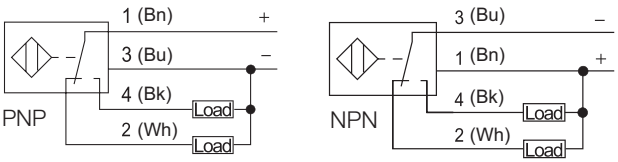

2 NC/4 NO | 2 NC/4 NO

Mechanical Drawing

Drawing 1

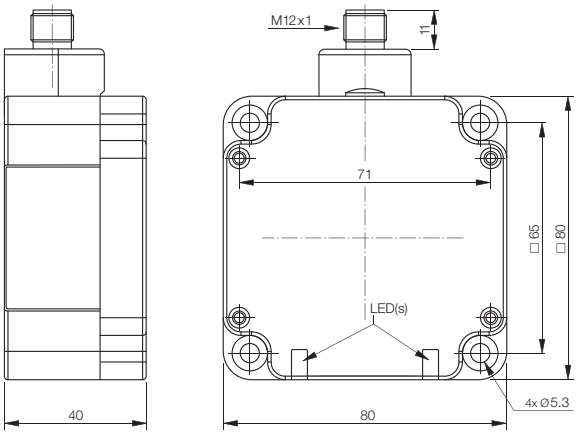

Approvals
Certificates

CE

This edition replaces all previous issues. Availability, errors and specification subject to change without notice.

UNOPAL PRIVATE LIMITED
8, UBI ROAD 2, #06-20, ZERVEX
SINGAPORE 408538

TEL: +65-6747 0083
FAX: +65-6747 6041

EMAIL: unopal@singnet.com.sg
WEBSITE: www.unopal.com.sg

Plastic Rectangular-W80

General Data

- Plastic housing
- Rectangular 80x80mm
- AC/DC 2-wire
- 2 function display LED's
- Degree of protection IP67
- Screw terminals or M12 connector
- Standardized mounting hole arrangement

Technical Data

Type	Rated operating distance S_n	Mounting	Output function	Output type	Voltage-range U_B	Rated current	Switching frequency	Ambient temperature	Connection	Mechanical Drawing
Fi40-W80-OA41L-Q	40mm	flush	NO	AC/DC	20…240VAC/DC	≤200mA	20Hz	-25…70°C	Screw terminals	1
Ni50-W80-CA41L-Q	50mm	non flush	NC	AC/DC	20…240VAC/DC	≤200mA	20Hz	-25…70°C	Screw terminals	1
Fi40-W80-VA41L-Q	40mm	flush	NO / NC	AC/DC	20…240VAC/DC	≤200mA	20Hz	-25…70°C	Screw terminals	1
Ni50-W80-VA41L-Q	50mm	non flush	NO / NC	AC/DC	20…240VAC/DC	≤200mA	20Hz	-25…70°C	Screw terminals	1
Fi40-W80-OA41L-Q12	40mm	flush	NO	AC/DC	20…240VAC/DC	≤200mA	20Hz	-25…70°C	M12 connector	2
Ni50-W80-CA41L-Q12	50mm	non flush	NC	AC/DC	20…240VAC/DC	≤200mA	20Hz	-25…70°C	M12 connector	2
Fi40-W80-VA41L-Q12	40mm	flush	NO / NC	AC/DC	20…240VAC/DC	≤200mA	20Hz	-25…70°C	M12 connector	2
Ni50-W80-VA41L-Q12	50mm	non flush	NO / NC	AC/DC	20…240VAC/DC	≤200mA	20Hz	-25…70°C	M12 connector	2

Connection Diagram

Bu = blue; Bn = brown; Bk = black; Wh = white; (1-4) = Connector pin M12 / Terminals Nr.

Screw terminals/Connector

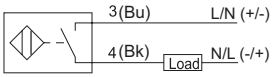

AC/DC-2 wire NO

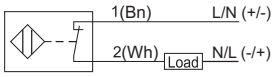

AC/DC-2 wire NC

Mechanical Drawing

Drawing 1

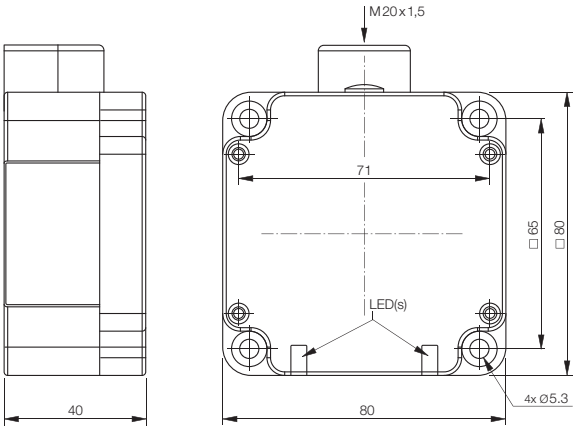

Drawing 2

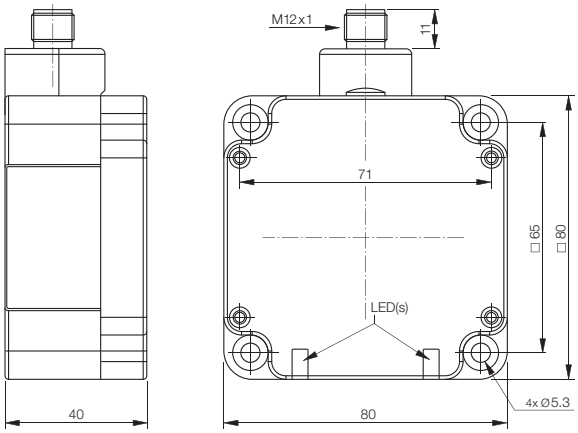

Approvals Certificates

CE

This edition replaces all previous issues. Availability, errors and specification subject to change without notice.

UNOPAL PRIVATE LIMITED
8, UBI ROAD 2, #06-20, ZERVEX
SINGAPORE 408538

TEL: +65-6747 0083
FAX: +65-6747 6041

EMAIL: unopal@singnet.com.sg
WEBSITE: www.unopal.com.sg

Plastic Rectangular-WL40

General Data

- Plastic housing
- Rectangular 40x40x118mm
- DC 2-wire
- 2 function display LED's
- Degree of protection IP67
- Screw terminals
- Variable orientation of the active
- Wide voltage range

Technical Data

Type	Rated operating distance S_n	Mounting	Output function	Output type	Voltage-range U_B	Rated current	Switching frequency	Ambient temperature	Connection	Mechanical Drawing
Fi15-WL40-OD9L-Q	15mm	flush	NO	DC	10…60VDC	≤200mA	150Hz	-25…70°C	Screw terminals	1
Ni20-WL40-OD9L-Q	20mm	non flush	NO	DC	10…60VDC	≤200mA	150Hz	-25…70°C	Screw terminals	1
Fi15-WL40-CD9L-Q	15mm	flush	NC	DC	10…60VDC	≤200mA	150Hz	-25…70°C	Screw terminals	1
Ni20-WL40-CD9L-Q	20mm	non flush	NC	DC	10…60VDC	≤200mA	150Hz	-25…70°C	Screw terminals	1

Connection Diagram

Bu = blue; Bn = brown; Bk = black; Wh = white; (1-4) = Terminals Nr.

Screw terminals

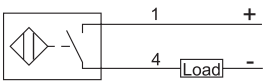

DC-2 wire NO

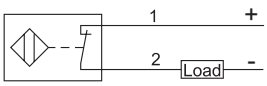

DC-2 wire NC

Mechanical Drawing

Drawing 1

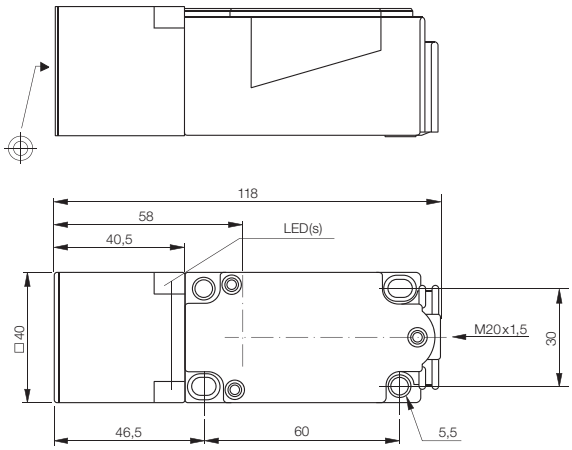

Approvals Certificates

CE

This edition replaces all previous issues. Availability, errors and specification subject to change without notice.

UNOPAL PRIVATE LIMITED
8, UBI ROAD 2, #06-20, ZERVEX
SINGAPORE 408538

TEL: +65-6747 0083
FAX: +65-6747 6041

EMAIL: unopal@singnet.com.sg
WEBSITE: www.unopal.com.sg

Plastic Rectangular-WL40

General Data

- Plastic housing
- Rectangular 40x40x118mm
- DC 3/4-wire
- 2 function display LED's
- Degree of protection IP67
- Screw terminals
- Variable orientation of the active
- Standardized mounting hole arrangement
- Normally open / normally closed / change-over

Technical Data

Type	Rated operating distance S_n	Mounting	Output function	Output type	Voltage-range U_B	Rated current	Switching frequency	Ambient temperature	Connection	Mechanical Drawing
Fi15-WL40-ON6L-Q	15mm	flush	NO	NPN	10…30VDC	≤200mA	150Hz	-25…70°C	Screw terminals	1
Fi15-WL40-CN6L-Q	15mm	flush	NC	NPN	10…30VDC	≤200mA	150Hz	-25…70°C	Screw terminals	1
Fi15-WL40-BN6L-Q	15mm	flush	NO+NC	NPN	10…30VDC	≤200mA	150Hz	-25…70°C	Screw terminals	1
Fi15-WL40-OP6L-Q	15mm	flush	NO	PNP	10…30VDC	≤200mA	150Hz	-25…70°C	Screw terminals	1
Fi15-WL40-CP6L-Q	15mm	flush	NC	PNP	10…30VDC	≤200mA	150Hz	-25…70°C	Screw terminals	1
Fi15-WL40-BP6L-Q	15mm	flush	NO+NC	PNP	10…30VDC	≤200mA	150Hz	-25…70°C	Screw terminals	1
Ni20-WL40-ON6L-Q	20mm	non flush	NO	NPN	10…30VDC	≤200mA	150Hz	-25…70°C	Screw terminals	1
Ni20-WL40-CN6L-Q	20mm	non flush	NC	NPN	10…30VDC	≤200mA	150Hz	-25…70°C	Screw terminals	1
Ni20-WL40-BN6L-Q	20mm	non flush	NO+NC	NPN	10…30VDC	≤200mA	150Hz	-25…70°C	Screw terminals	1
Ni20-WL40-OP6L-Q	20mm	non flush	NO	PNP	10…30VDC	≤200mA	150Hz	-25…70°C	Screw terminals	1
Ni20-WL40-CP6L-Q	20mm	non flush	NC	PNP	10…30VDC	≤200mA	150Hz	-25…70°C	Screw terminals	1
Ni20-WL40-BP6L-Q	20mm	non flush	NO+NC	PNP	10…30VDC	≤200mA	150Hz	-25…70°C	Screw terminals	1

Connection Diagram

Bu = blue; Bn = brown; Bk = black; Wh = white; (1-4) = Terminals Nr.

Screw terminals

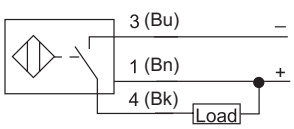

NPN NO

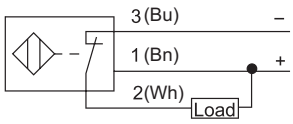

NPN NC

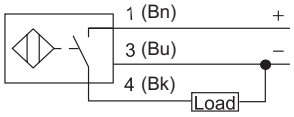

PNP NO

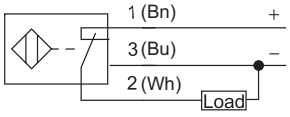

PNP NC

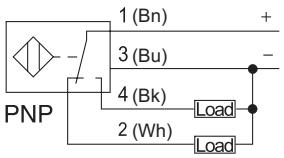

2 NC/4 NO

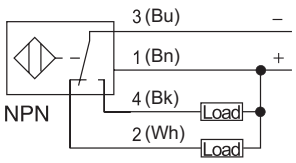

2 NC/4 NO

Mechanical Drawing

Drawing 1

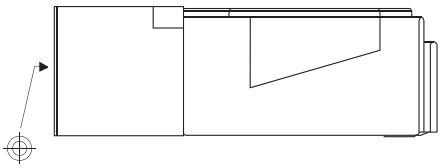

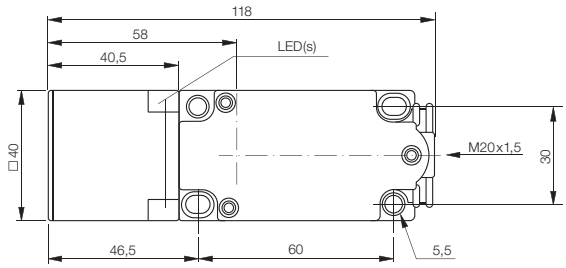

Approvals
Certificates

CE

This edition replaces all previous issues. Availability, errors and specification subject to change without notice.

UNOPAL PRIVATE LIMITED
8, UBI ROAD 2, #06-20, ZERVEX
SINGAPORE 408538

TEL: +65-6747 0083
FAX: +65-6747 6041

EMAIL: unopal@singnet.com.sg
WEBSITE: www.unopal.com.sg

Plastic Rectangular-WL40

General Data

- Plastic housing
- Rectangular 40x40x118mm
- AC/DC 2-wire
- 2 function display LED's
- Degree of protection IP67
- Screw terminals
- Variable orientation of the active
- Standardized mounting hole arrangement
- Normally open / normally closed / change-over

Technical Data

Type	Rated operating distance S_n	Mounting	Output function	Output type	Voltage-range U_B	Rated current	Switching frequency	Ambient temperature	Connection	Mechanical Drawing
Fi15-WL40-OA41L-Q	15mm	flush	NO	AC/DC	20…240VAC/DC	≤200mA	20Hz	-25…70°C	Screw terminals	1
Ni20-WL40-CA41L-Q	20mm	non flush	NC	AC/DC	20…240VAC/DC	≤200mA	20Hz	-25…70°C	Screw terminals	1
Fi15-WL40-VA41L-Q	15mm	flush	NO / NC	AC/DC	20…240VAC/DC	≤200mA	20Hz	-25…70°C	Screw terminals	1
Ni20-WL40-VA41L-Q	20mm	non flush	NO / NC	AC/DC	20…240VAC/DC	≤200mA	20Hz	-25…70°C	Screw terminals	1

Connection Diagram

Bu = blue; Bn = brown; Bk = black; Wh = white; (1-4) = Terminal Nr.

Screw terminals

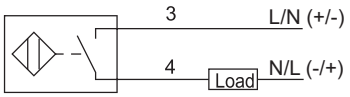

AC/DC-2 wire NO

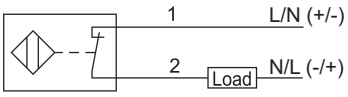

AC/DC-2 wire NC

Mechanical Drawing

Drawing 1

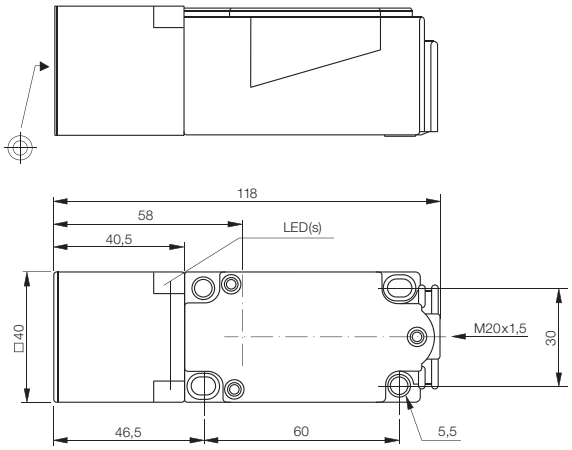

Approvals Certificates

CE

This edition replaces all previous issues. Availability, errors and specification subject to change without notice.

UNOPAL PRIVATE LIMITED
8, UBI ROAD 2, #06-20, ZERVEX
SINGAPORE 408538

TEL: +65-6747 0083
FAX: +65-6747 6041

EMAIL: unopal@singnet.com.sg
WEBSITE: www.unopal.com.sg

Long-Sensing Metal Barrel-M8

General Data

- Stainless steel housing
- Threaded barrel M8 x 1
- DC 3-wire
- Function display LED
- Degree of protection IP67
- Extended operating distance
- Varied output function
- Non flush mounting
- Standard size
- 2m cable/ connector M8/connector M12 wiring

Technical Data

Type	Rated operating distance S_n	Mounting	Output function	Output type	Voltage-range U_B	Rated current	Switching frequency	Ambient temperature	Connection	Mechanical Drawing
Ni4-KM08-OP6L	4mm	non flush	NO	PNP	10…30VDC	≤200mA	600Hz	-25…70°C	2m cable	1
Ni4-KM08-ON6L	4mm	non flush	NO	NPN	10…30VDC	≤200mA	600Hz	-25…70°C	2m cable	1
Ni4-KM08-CP6L	4mm	non flush	NC	PNP	10…30VDC	≤200mA	600Hz	-25…70°C	2m cable	1
Ni4-KM08-CN6L	4mm	non flush	NC	NPN	10…30VDC	≤200mA	600Hz	-25…70°C	2m cable	1
Ni4-KM08-OP6L-Q8	4mm	non flush	NO	PNP	10…30VDC	≤200mA	600Hz	-25…70°C	M8 Connector	2
Ni4-KM08-ON6L-Q8	4mm	non flush	NO	NPN	10…30VDC	≤200mA	600Hz	-25…70°C	M8 Connector	2
Ni4-KM08-CP6L-Q8	4mm	non flush	NC	PNP	10…30VDC	≤200mA	600Hz	-25…70°C	M8 Connector	2
Ni4-KM08-CN6L-Q8	4mm	non flush	NC	NPN	10…30VDC	≤200mA	600Hz	-25…70°C	M8 Connector	2
Ni4-KM08-OP6L-Q12	4mm	non flush	NO	PNP	10…30VDC	≤200mA	600Hz	-25…70°C	M12 connector	3
Ni4-KM08-ON6L-Q12	4mm	non flush	NO	NPN	10…30VDC	≤200mA	600Hz	-25…70°C	M12 connector	3
Ni4-KM08-CP6L-Q12	4mm	non flush	NC	PNP	10…30VDC	≤200mA	600Hz	-25…70°C	M12 connector	3
Ni4-KM08-CN6L-Q12	4mm	non flush	NC	NPN	10…30VDC	≤200mA	600Hz	-25…70°C	M12 connector	3

Connection Diagram

Bu = blue; Bn = brown; Bk = black; Wh = white; (1-4) = Connector pin M8 & M12

Cable

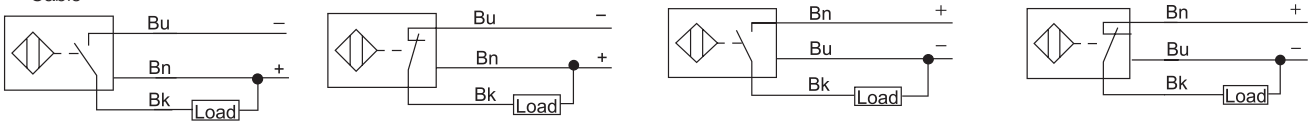

NPN NO | NPN NC | PNP NO | PNP NC

Connector **Q8**

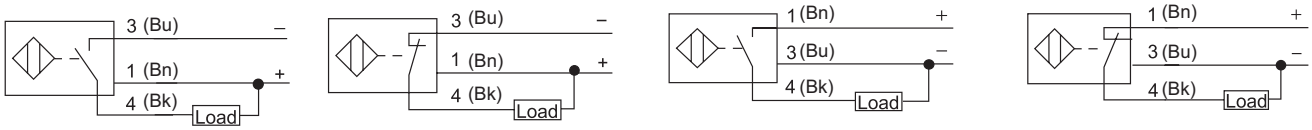

NPN NO | NPN NC | PNP NO | PNP NC

Connector **Q12**

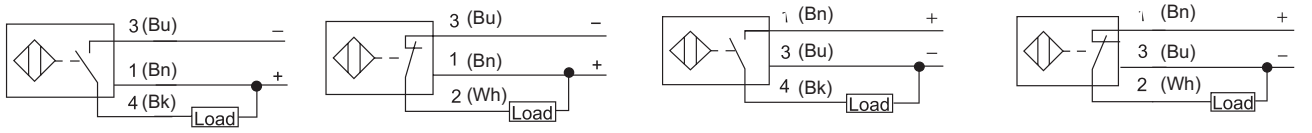

NPN NO | NPN NC | PNP NO | PNP NC

Approvals Certificates

CE

This edition replaces all previous issues. Availability, errors and specification subject to change without notice.

UNOPAL PRIVATE LIMITED
8, UBI ROAD 2, #06-20, ZERVEX
SINGAPORE 408538

TEL: +65-6747 0083
FAX: +65-6747 6041

EMAIL: unopal@singnet.com.sg
WEBSITE: www.unopal.com.sg

Long-Sensing Metal Barrel-M8

Mechanical Drawing

Drawing 1

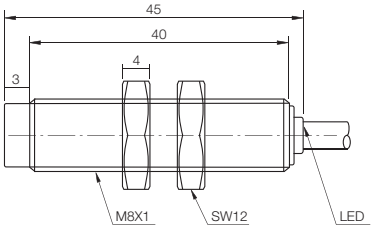

Drawing 2

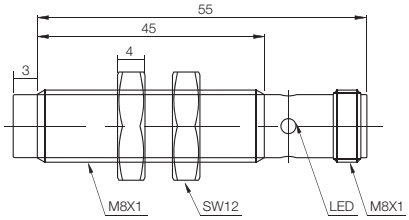

Drawing 3

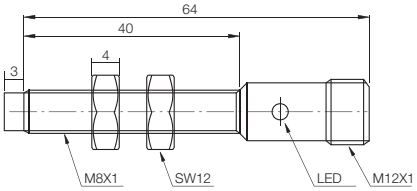

Approvals
Certificates

This edition replaces all previous issues. Availability, errors and specification subject to change without notice.

UNOPAL PRIVATE LIMITED
8, UBI ROAD 2, #06-20, ZERVEX
SINGAPORE 408538

TEL: +65-6747 0083
FAX: +65-6747 6041

EMAIL: unopal@singnet.com.sg
WEBSITE: www.unopal.com.sg

Long-Sensing Metal Barrel-M12

General Data

- Metal housing
- Threaded barrel M12x1
- DC 2-wire
- Function display LED
- Degree of protection IP67
- Extended operating distance
- Standard size
- Flush/non flush mounting

Technical Data

Type	Rated operating distance S_n	Mounting	Output function	Output type	Voltage-range U_B	Rated current	Switching frequency	Ambient temperature	Connection	Mechanical Drawing
Fi4-M12-OD6L	4mm	flush	NO	DC	10…30VDC	≤100mA	500Hz	-25…70°C	2m cable	1
Fi4-M12-CD6L	4mm	flush	NC	DC	10…30VDC	≤100mA	500Hz	-25…70°C	2m cable	1
Ni8-M12-OD6L	8mm	non flush	NO	DC	10…30VDC	≤100mA	200Hz	-25…70°C	2m cable	2
Ni8-M12-CD6L	8mm	non flush	NC	DC	10…30VDC	≤100mA	200Hz	-25…70°C	2m cable	2
Fi4-M12-OD6L-Q12	4mm	flush	NO	DC	10…30VDC	≤100mA	500Hz	-25…70°C	M12 connector	3
Fi4-M12-CD6L-Q12	4mm	flush	NC	DC	10…30VDC	≤100mA	500Hz	-25…70°C	M12 connector	3
Ni8-M12-OD6L-Q12	8mm	non flush	NO	DC	10…30VDC	≤100mA	200Hz	-25…70°C	M12 connector	4
Ni8-M12-CD6L-Q12	8mm	non flush	NC	DC	10…30VDC	≤100mA	200Hz	-25…70°C	M12 connector	4

Connection Diagram

Bu = blue; Bn = brown; Bk = black; Wh = white; (1-4) = Connector pin M12

Cable

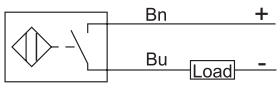

DC-2 wire NO

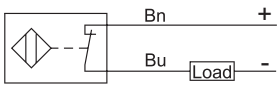

DC-2 wire NC

Connector

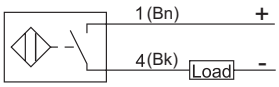

DC-2 wire NO

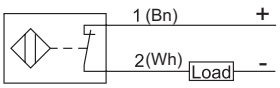

DC-2 wire NC

Mechanical Drawing

Drawing 1

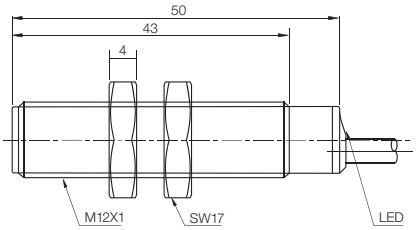

Drawing 2

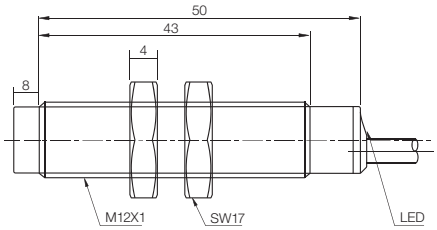

Drawing 3

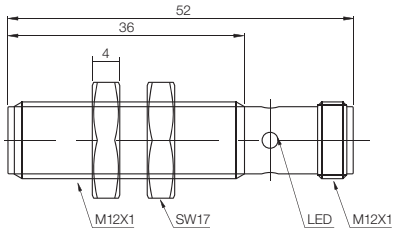

Drawing 4

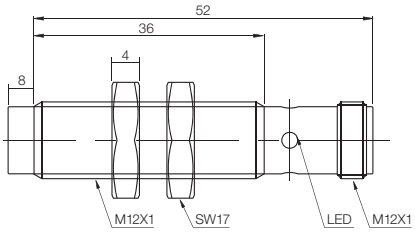

Approvals
Certificates

CE

This edition replaces all previous issues. Availability, errors and specification subject to change without notice.

UNOPAL PRIVATE LIMITED
8, UBI ROAD 2, #06-20, ZERVEX
SINGAPORE 408538

TEL: +65-6747 0083
FAX: +65-6747 6041

EMAIL: unopal@singnet.com.sg
WEBSITE: www.unopal.com.sg

Long-Sensing Metal Barrel-M12

General Data

- Metal housing
- Threaded barrel M12x1
- DC 3-wire
- Function display LED
- Degree of protection IP67
- Extended operating distance
- Standard size
- Flush/non flush mounting
- Varied output function

Technical Data

Type	Rated operating distance S_n	Mounting	Output function	Output type	Voltage-range U_B	Rated current	Switching frequency	Ambient temperature	Connection	Mechanical Drawing
Fi4-M12-OP6L	4mm	flush	NO	PNP	10…30VDC	≤200mA	800Hz	-25…70°C	2m cable	1
Fi4-M12-ON6L	4mm	flush	NO	NPN	10…30VDC	≤200mA	800Hz	-25…70°C	2m cable	1
Fi4-M12-CP6L	4mm	flush	NC	PNP	10…30VDC	≤200mA	800Hz	-25…70°C	2m cable	1
Fi4-M12-CN6L	4mm	flush	NC	NPN	10…30VDC	≤200mA	800Hz	-25…70°C	2m cable	1
Ni8-M12-OP6L	8mm	non flush	NO	PNP	10…30VDC	≤200mA	400Hz	-25…70°C	2m cable	2
Ni8-M12-ON6L	8mm	non flush	NO	NPN	10…30VDC	≤200mA	400Hz	-25…70°C	2m cable	2
Ni8-M12-CP6L	8mm	non flush	NC	PNP	10…30VDC	≤200mA	400Hz	-25…70°C	2m cable	2
Ni8-M12-CN6L	8mm	non flush	NC	NPN	10…30VDC	≤200mA	400Hz	-25…70°C	2m cable	2
Fi4-M12-OP6L-Q12	4mm	flush	NO	PNP	10…30VDC	≤200mA	800Hz	-25…70°C	M12 connector	3
Fi4-M12-ON6L-Q12	4mm	flush	NO	NPN	10…30VDC	≤200mA	800Hz	-25…70°C	M12 connector	3
Fi4-M12-CP6L-Q12	4mm	flush	NC	PNP	10…30VDC	≤200mA	800Hz	-25…70°C	M12 connector	3
Fi4-M12-CN6L-Q12	4mm	flush	NC	NPN	10…30VDC	≤200mA	800Hz	-25…70°C	M12 connector	3
Ni8-M12-OP6L-Q12	8mm	non flush	NO	PNP	10…30VDC	≤200mA	400Hz	-25…70°C	M12 connector	4
Ni8-M12-ON6L-Q12	8mm	non flush	NO	NPN	10…30VDC	≤200mA	400Hz	-25…70°C	M12 connector	4
Ni8-M12-CP6L-Q12	8mm	non flush	NC	PNP	10…30VDC	≤200mA	400Hz	-25…70°C	M12 connector	4
Ni8-M12-CN6L-Q12	8mm	non flush	NC	NPN	10…30VDC	≤200mA	400Hz	-25…70°C	M12 connector	4

Connection Diagram

Bu = blue; Bn = brown; Bk = black; Wh = white; (1-4) = Connector pin M12

Cable

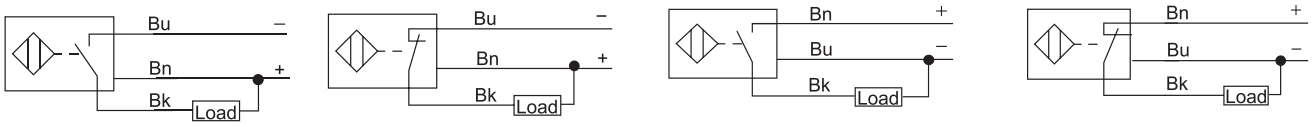

NPN NO NPN NC PNP NO PNP NC

Connector

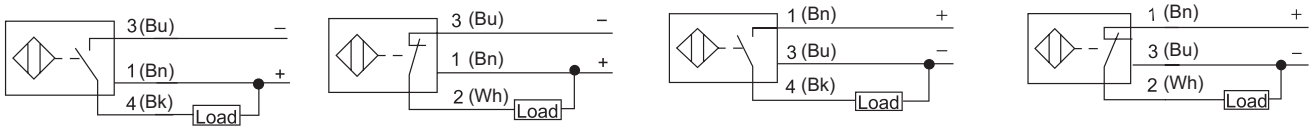

NPN NO NPN NC PNP NO PNP NC

Approvals Certificates

CE

This edition replaces all previous issues. Availability, errors and specification subject to change without notice.

UNOPAL PRIVATE LIMITED
8, UBI ROAD 2, #06-20, ZERVEX
SINGAPORE 408538

TEL: +65-6747 0083
FAX: +65-6747 6041

EMAIL: unopal@singnet.com.sg
WEBSITE: www.unopal.com.sg

Long-Sensing Metal Barrel-M12

Mechanical Drawing

Drawing 1

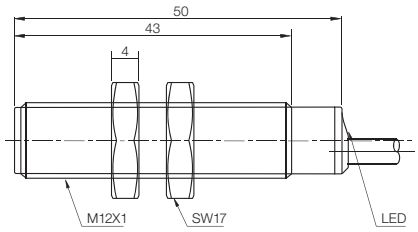

Drawing 2

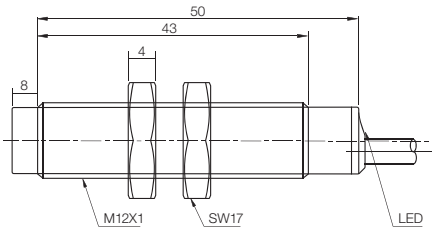

Drawing 3

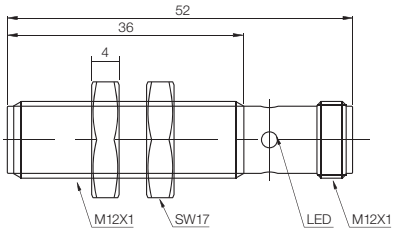

Drawing 4

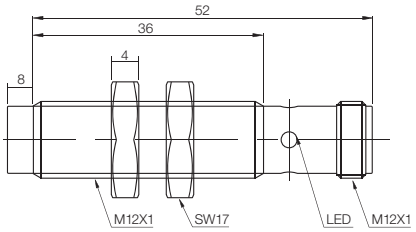

Approvals
Certificates

This edition replaces all previous issues. Availability, errors and specification subject to change without notice.

UNOPAL PRIVATE LIMITED
8, UBI ROAD 2, #06-20, ZERVEX
SINGAPORE 408538

TEL: +65-6747 0083
FAX: +65-6747 6041

EMAIL: unopal@singnet.com.sg
WEBSITE: www.unopal.com.sg

Long-Sensing Metal Barrel-M18

General Data

- Metal housing
- Threaded barrel M18x1
- DC 2-wire
- Function display LED
- Degree of protection IP67
- Extended operating distance
- Standard size
- Flush/non flush mounting

Technical Data

Type	Rated operating distance S_n	Mounting	Output function	Output type	Voltage-range U_B	Rated current	Switching frequency	Ambient temperature	Connection	Mechanical Drawing
Fi8-M18-OD6L	8mm	flush	NO	DC	10…30VDC	≤100mA	300Hz	-25…70°C	2m cable	1
Fi8-M18-CD6L	8mm	flush	NC	DC	10…30VDC	≤100mA	300Hz	-25…70°C	2m cable	1
Ni12-M18-OD6L	12mm	non flush	NO	DC	10…30VDC	≤100mA	150Hz	-25…70°C	2m cable	2
Ni12-M18-CD6L	12mm	non flush	NC	DC	10…30VDC	≤100mA	150Hz	-25…70°C	2m cable	2
Fi8-M18-OD6L-Q12	8mm	flush	NO	DC	10…30VDC	≤100mA	300Hz	-25…70°C	M12 connector	3
Fi8-M18-CD6L-Q12	8mm	flush	NC	DC	10…30VDC	≤100mA	300Hz	-25…70°C	M12 connector	3
Ni12-M18-OD6L-Q12	12mm	non flush	NO	DC	10…30VDC	≤100mA	150Hz	-25…70°C	M12 connector	4
Ni12-M18-CD6L-Q12	12mm	non flush	NC	DC	10…30VDC	≤100mA	150Hz	-25…70°C	M12 connector	4

Connection Diagram

Bu = blue; Bn = brown; Bk = black; Wh = white; (1-4) = Connector pin M12

Cable

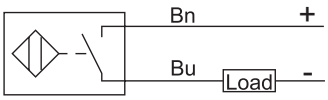

DC-2 wire NO

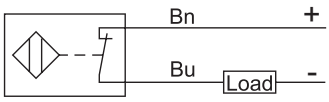

DC-2 wire NC

Connector

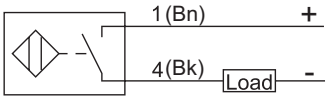

DC-2 wire NO

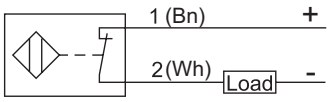

DC-2 wire NC

Mechanical Drawing

Drawing 1

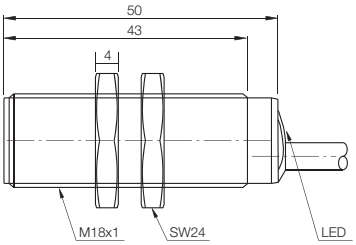

Drawing 2

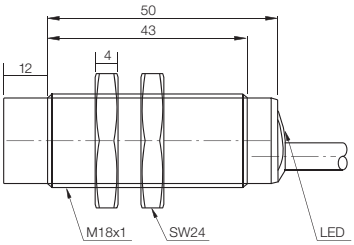

Drawing 3

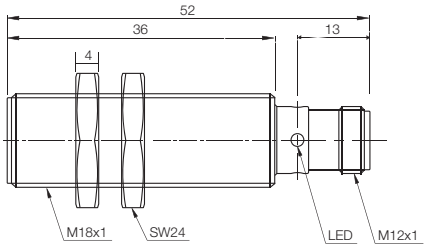

Drawing 4

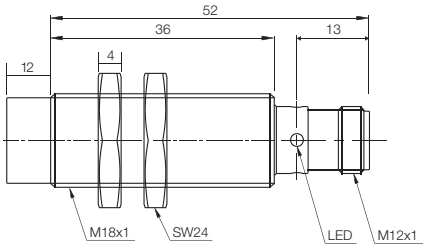

Approvals
Certificates

CE

This edition replaces all previous issues. Availability, errors and specification subject to change without notice.

UNOPAL PRIVATE LIMITED
8, UBI ROAD 2, #06-20, ZERVEX
SINGAPORE 408538

TEL: +65-6747 0083
FAX: +65-6747 6041

EMAIL: unopal@singnet.com.sg
WEBSITE: www.unopal.com.sg

Long-Sensing Metal Barrel-M18

General Data

- Metal housing
- Threaded barrel M18x1
- DC 3-wire
- Function display LED
- Degree of protection IP67
- Extended operating distance
- Varied output function
- Standard size
- Flush/non flush mounting

Technical Data

Type	Rated operating distance S_n	Mounting	Output function	Output type	Voltage-range U_B	Rated current	Switching frequency	Ambient temperature	Connection	Mechanical Drawing
Fi8-M18-OP6L	8mm	flush	NO	PNP	10…30VDC	≤200mA	500Hz	-25…70°C	2m cable	1
Fi8-M18-ON6L	8mm	flush	NO	NPN	10…30VDC	≤200mA	500Hz	-25…70°C	2m cable	1
Fi8-M18-CP6L	8mm	flush	NC	PNP	10…30VDC	≤200mA	500Hz	-25…70°C	2m cable	1
Fi8-M18-CN6L	8mm	flush	NC	NPN	10…30VDC	≤200mA	500Hz	-25…70°C	2m cable	1
Ni12-M18-OP6L	12mm	non flush	NO	PNP	10…30VDC	≤200mA	300Hz	-25…70°C	2m cable	2
Ni12-M18-ON6L	12mm	non flush	NO	NPN	10…30VDC	≤200mA	300Hz	-25…70°C	2m cable	2
Ni12-M18-CP6L	12mm	non flush	NC	PNP	10…30VDC	≤200mA	300Hz	-25…70°C	2m cable	2
Ni12-M18-CN6L	12mm	non flush	NC	NPN	10…30VDC	≤200mA	300Hz	-25…70°C	2m cable	2
Fi8-M18-OP6L-Q12	8mm	flush	NO	PNP	10…30VDC	≤200mA	500Hz	-25…70°C	M12 connector	3
Fi8-M18-ON6L-Q12	8mm	flush	NO	NPN	10…30VDC	≤200mA	500Hz	-25…70°C	M12 connector	3
Fi8-M18-CP6L-Q12	8mm	flush	NC	PNP	10…30VDC	≤200mA	500Hz	-25…70°C	M12 connector	3
Fi8-M18-CN6L-Q12	8mm	flush	NC	NPN	10…30VDC	≤200mA	500Hz	-25…70°C	M12 connector	3
Ni12-M18-OP6L-Q12	12mm	non flush	NO	PNP	10…30VDC	≤200mA	300Hz	-25…70°C	M12 connector	4
Ni12-M18-ON6L-Q12	12mm	non flush	NO	NPN	10…30VDC	≤200mA	300Hz	-25…70°C	M12 connector	4
Ni12-M18-CP6L-Q12	12mm	non flush	NC	PNP	10…30VDC	≤200mA	300Hz	-25…70°C	M12 connector	4
Ni12-M18-CN6L-Q12	12mm	non flush	NC	NPN	10…30VDC	≤200mA	300Hz	-25…70°C	M12 connector	4

Connection Diagram

Bu = blue; Bn = brown; Bk = black; Wh = white; (1-4) = Connector pin M12

Cable

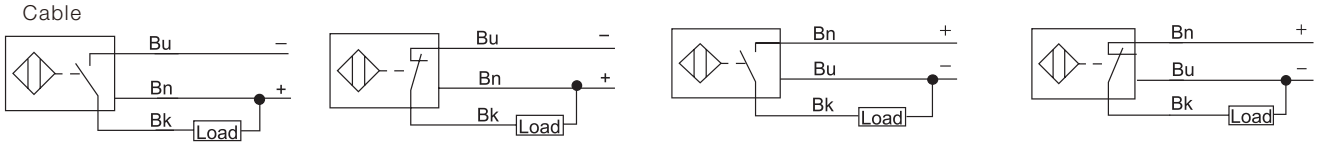

NPN NO NPN NC PNP NO PNP NC

Connector

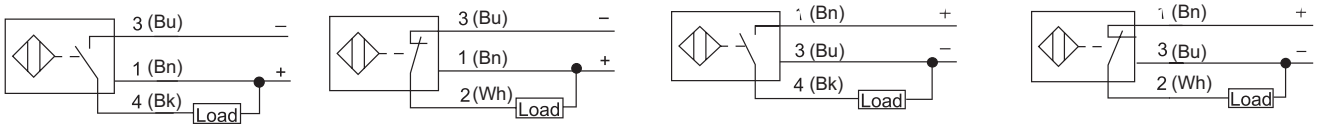

NPN NO NPN NC PNP NO PNP NC

Approvals Certificates

CE

This edition replaces all previous issues. Availability, errors and specification subject to change without notice.

UNOPAL PRIVATE LIMITED
8, UBI ROAD 2, #06-20, ZERVEX
SINGAPORE 408538

TEL: +65-6747 0083
FAX: +65-6747 6041

EMAIL: unopal@singnet.com.sg
WEBSITE: www.unopal.com.sg

Long-Sensing Metal Barrel-M18

Mechanical Drawing

Drawing 1

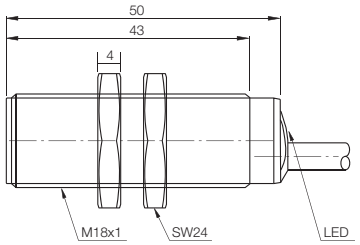

Drawing 2

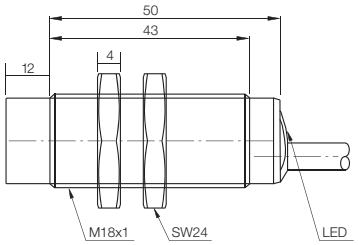

Drawing 3

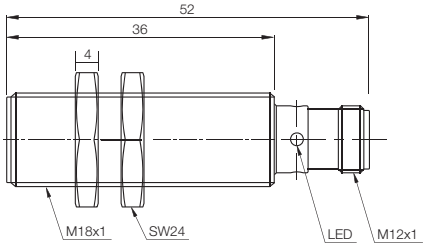

Drawing 4

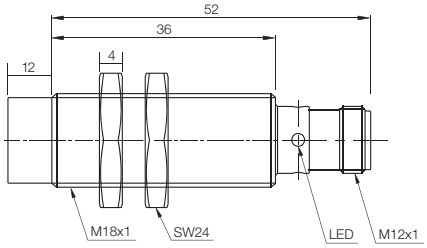

Approvals
Certificates

This edition replaces all previous issues. Availability, errors and specification subject to change without notice.

UNOPAL PRIVATE LIMITED
8, UBI ROAD 2, #06-20, ZERVEX
SINGAPORE 408538

TEL: +65-6747 0083
FAX: +65-6747 6041

EMAIL: unopal@singnet.com.sg
WEBSITE: www.unopal.com.sg

Long-Sensing Metal Barrel-M18

General Data

- Metal housing
- Threaded barrel M18x1
- AC/DC 2-wire
- Function display LED
- Degree of protection IP67
- Extended operating distance
- Standard size
- Flush/non flush mounting
- Wide voltage range

Technical Data

Type	Rated operating distance S_n	Mounting	Output function	Output type	Voltage-range U_B	Rated current	Switching frequency	Ambient temperature	Connection	Mechanical Drawing
Fi8-M18-0A41L	8mm	flush	NO	AC/DC	20…250VAC/DC	≤300mA (AC) ≤100mA (DC)	20Hz (AC) 50Hz (DC)	-25…70°C	2m cable	1
Fi8-M18-CA41L	8mm	flush	NC	AC/DC	20…250VAC/DC	≤300mA (AC) ≤100mA (DC)	20Hz (AC) 50Hz (DC)	-25…70°C	2m cable	1
Ni12-M18-0A41L	12mm	non flush	NO	AC/DC	20…250VAC/DC	≤300mA (AC) ≤100mA (DC)	20Hz (AC) 50Hz (DC)	-25…70°C	2m cable	2
Ni12-M18-CA41L	12mm	non flush	NC	AC/DC	20…250VAC/DC	≤300mA (AC) ≤100mA (DC)	20Hz (AC) 50Hz (DC)	-25…70°C	2m cable	2

Connection Diagram

Bu = blue; Bn = brown; Bk = black; Wh = white; (1-4) = Connector pin M12

Cable

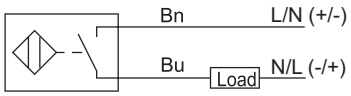

AC/DC-2 wire NO

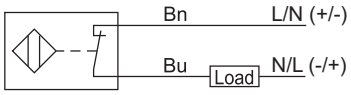

AC/DC-2 wire NC

Mechanical Drawing

Drawing 1

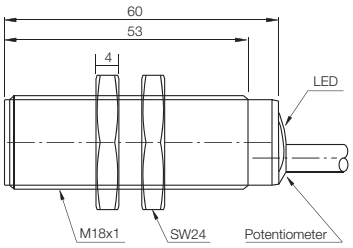

Drawing 2

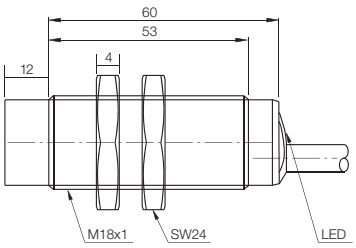

Approvals Certificates

CE

This edition replaces all previous issues. Availability, errors and specification subject to change without notice.

UNOPAL PRIVATE LIMITED
8, UBI ROAD 2, #06-20, ZERVEX
SINGAPORE 408538

TEL: +65-6747 0083
FAX: +65-6747 6041

EMAIL: unopal@singnet.com.sg
WEBSITE: www.unopal.com.sg

Long-Sensing Metal Barrel-M30

General Data

- Metal housing
- Threaded barrel M30x1,5
- DC 2-wire
- Function display LED
- Degree of protection IP67
- Extended operating distance
- Standard size
- Flush/non flush mounting

Technical Data

Type	Rated operating distance S_n	Mounting	Output function	Output type	Voltage-range U_B	Rated current	Switching frequency	Ambient temperature	Connection	Mechanical Drawing
Fi15-M30-OD6L	15mm	flush	NO	DC	10…30VDC	≤100mA	200Hz	-25…70°C	2m cable	1
Fi15-M30-CD6L	15mm	flush	NC	DC	10…30VDC	≤100mA	200Hz	-25…70°C	2m cable	1
Ni22-M30-OD6L	22mm	non flush	NO	DC	10…30VDC	≤100mA	100Hz	-25…70°C	2m cable	2
Ni22-M30-CD6L	22mm	non flush	NC	DC	10…30VDC	≤100mA	100Hz	-25…70°C	2m cable	2
Fi15-M30-OD6L-Q12	15mm	flush	NO	DC	10…30VDC	≤100mA	200Hz	-25…70°C	M12 connector	3
Fi15-M30-CD6L-Q12	15mm	flush	NC	DC	10…30VDC	≤100mA	200Hz	-25…70°C	M12 connector	3
Ni22-M30-OD6L-Q12	22mm	non flush	NO	DC	10…30VDC	≤100mA	100Hz	-25…70°C	M12 connector	4
Ni22-M30-CD6L-Q12	22mm	non flush	NC	DC	10…30VDC	≤100mA	100Hz	-25…70°C	M12 connector	4

Connection Diagram

Bu = blue; Bn = brown; Bk = black; Wh = white; (1-4) = Connector pin M12

Cable

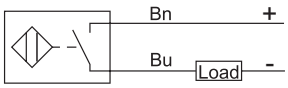

DC-2 wire NO

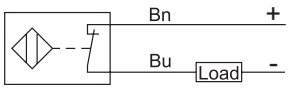

DC-2 wire NC

Connector

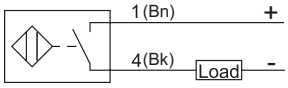

DC-2 wire NO

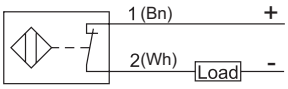

DC-2 wire NC

Approvals Certificates

CE

This edition replaces all previous issues. Availability, errors and specification subject to change without notice.

UNOPAL PRIVATE LIMITED
8, UBI ROAD 2, #06-20, ZERVEX
SINGAPORE 408538

TEL: +65-6747 0083
FAX: +65-6747 6041

EMAIL: unopal@singnet.com.sg
WEBSITE: www.unopal.com.sg

Long-Sensing Metal Barrel-M30

Mechanical Drawing

Drawing 1

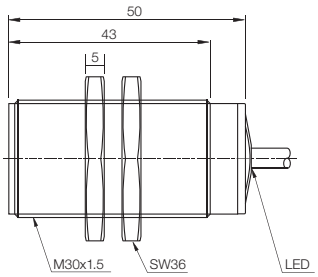

Drawing 2

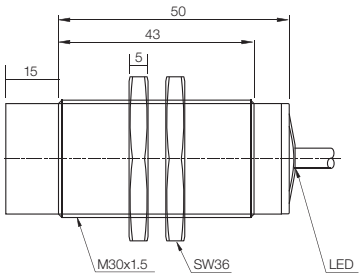

Drawing 3

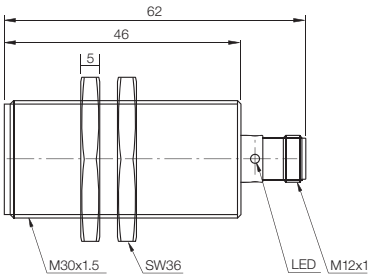

Drawing 4

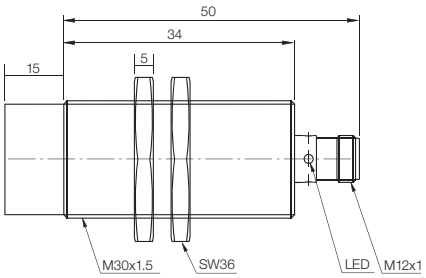

Approvals
Certificates

This edition replaces all previous issues. Availability, errors and specification subject to change without notice.

UNOPAL PRIVATE LIMITED
8, UBI ROAD 2, #06-20, ZERVEX
SINGAPORE 408538

TEL: +65-6747 0083
FAX: +65-6747 6041

EMAIL: unopal@singnet.com.sg
WEBSITE: www.unopal.com.sg

Long-Sensing Metal Barrel-M30

General Data

- Metal housing
- Threaded barrel M30 x 1,5
- DC 3-wire
- Function display LED
- Degree of protection IP67
- Extended operating distance
- Varied output function
- Standard size
- Flush/non flush mounting

Technical Data

Type	Rated operating distance S_n	Mounting	Output function	Output type	Voltage-range U_B	Rated current	Switching frequency	Ambient temperature	Connection	Mechanical Drawing
Fi15-M30-OP6L	15mm	flush	NO	PNP	10…30VDC	≤200mA	400Hz	-25…70°C	2m cable	1
Fi15-M30-ON6L	15mm	flush	NO	NPN	10…30VDC	≤200mA	400Hz	-25…70°C	2m cable	1
Fi15-M30-CP6L	15mm	flush	NC	PNP	10…30VDC	≤200mA	400Hz	-25…70°C	2m cable	1
Fi15-M30-CN6L	15mm	flush	NC	NPN	10…30VDC	≤200mA	400Hz	-25…70°C	2m cable	1
Ni22-M30-OP6L	22mm	non flush	NO	PNP	10…30VDC	≤200mA	200Hz	-25…70°C	2m cable	2
Ni22-M30-ON6L	22mm	non flush	NO	NPN	10…30VDC	≤200mA	200Hz	-25…70°C	2m cable	2
Ni22-M30-CP6L	22mm	non flush	NC	PNP	10…30VDC	≤200mA	200Hz	-25…70°C	2m cable	2
Ni22-M30-CN6L	22mm	non flush	NC	NPN	10…30VDC	≤200mA	200Hz	-25…70°C	2m cable	2
Fi15-M30-OP6L-Q12	15mm	flush	NO	PNP	10…30VDC	≤200mA	400Hz	-25…70°C	M12 connector	3
Fi15-M30-ON6L-Q12	15mm	flush	NO	NPN	10…30VDC	≤200mA	400Hz	-25…70°C	M12 connector	3
Fi15-M30-CP6L-Q12	15mm	flush	NC	PNP	10…30VDC	≤200mA	400Hz	-25…70°C	M12 connector	3
Fi15-M30-CN6L-Q12	15mm	flush	NC	NPN	10…30VDC	≤200mA	400Hz	-25…70°C	M12 connector	3
Ni22-M30-OP6L-Q12	22mm	non flush	NO	PNP	10…30VDC	≤200mA	200Hz	-25…70°C	M12 connector	4
Ni22-M30-ON6L-Q12	22mm	non flush	NO	NPN	10…30VDC	≤200mA	200Hz	-25…70°C	M12 connector	4
Ni22-M30-CP6L-Q12	22mm	non flush	NC	PNP	10…30VDC	≤200mA	200Hz	-25…70°C	M12 connector	4
Ni22-M30-CN6L-Q12	22mm	non flush	NC	NPN	10…30VDC	≤200mA	200Hz	-25…70°C	M12 connector	4

Connection Diagram

Bu = blue; Bn = brown; Bk = black; Wh = white; (1-4) = Connector pin M12

Cable

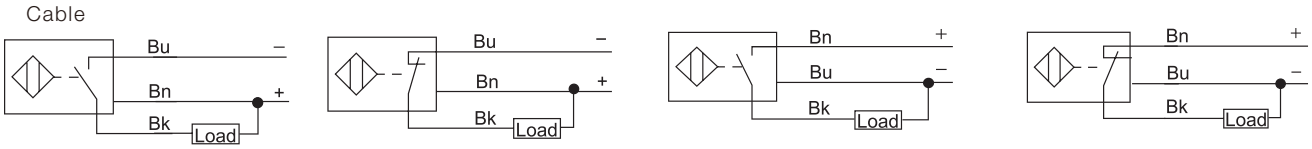

NPN NO NPN NC PNP NO PNP NC

Connector

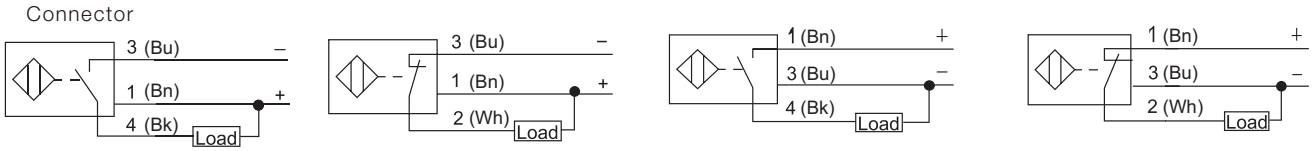

NPN NO NPN NC PNP NO PNP NC

Approvals Certificates

CE

UNOPAL PRIVATE LIMITED
8, UBI ROAD 2, #06-20, ZERVEX
SINGAPORE 408538

TEL: +65-6747 0083
FAX: +65-6747 6041

EMAIL: unopal@singnet.com.sg
WEBSITE: www.unopal.com.sg

This edition replaces all previous issues. Availability, errors and specification subject to change without notice.

Long-Sensing Metal Barrel-M30

Mechanical Drawing

Drawing 1

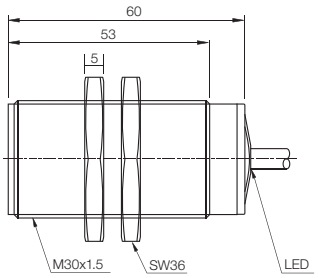

Drawing 2

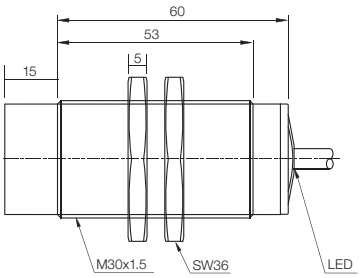

Drawing 3

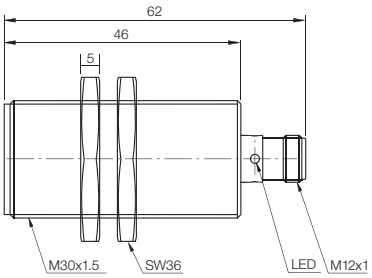

Drawing 4

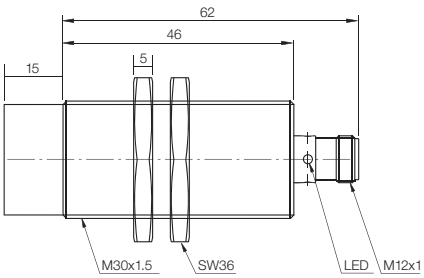

Approvals
Certificates

This edition replaces all previous issues. Availability, errors and specification subject to change without notice.

UNOPAL PRIVATE LIMITED
8, UBI ROAD 2, #06-20, ZERVEX
SINGAPORE 408538

TEL: +65-6747 0083
FAX: +65-6747 6041

EMAIL: unopal@singnet.com.sg
WEBSITE: www.unopal.com.sg

Long-Sensing Metal Barrel-M30

General Data

- Metal housing
- Threaded barrel M30x1,5
- AC/DC 2-wire
- Function display LED
- Degree of protection IP67
- Extended operating distance
- Standard size
- Flush/non flush mounting
- Wide voltage range

Technical Data

Type	Rated operating distance S_n	Mounting	Output function	Output type	Voltage-range U_B	Rated current	Switching frequency	Ambient temperature	Connection	Mechanical Drawing
Fi15-M30-OA41L	15mm	flush	NO	AC/DC	20…250VAC/DC	≤300mA (AC) ≤100mA (DC)	20Hz (AC) 50Hz (DC)	-25…70°C	2m cable	1
Fi15-M30-CA41L	15mm	flush	NC	AC/DC	20…250VAC/DC	≤300mA (AC) ≤100mA (DC)	20Hz (AC) 50Hz (DC)	-25…70°C	2m cable	1
Ni22-M30-OA41L	22mm	non flush	NO	AC/DC	20…250VAC/DC	≤300mA (AC) ≤100mA (DC)	20Hz (AC) 50Hz (DC)	-25…70°C	2m cable	2
Ni22-M30-CA41L	22mm	non flush	NC	AC/DC	20…250VAC/DC	≤300mA (AC) ≤100mA (DC)	20Hz (AC) 50Hz (DC)	-25…70°C	2m cable	2

Connection Diagram

Bu = blue; Bn = brown; Bk = black; Wh = white; (1-4) = Connector pin M12

Cable

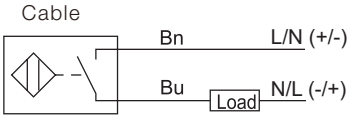

AC/DC-2 wire NO

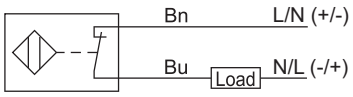

AC/DC-2 wire NC

Mechanical Drawing

Drawing 1

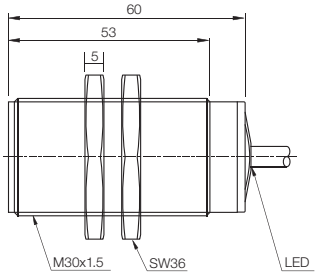

Drawing 2

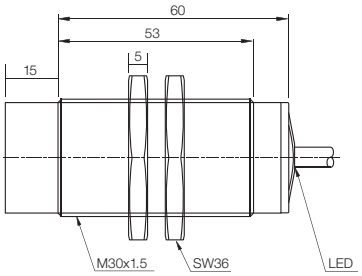

Approvals Certificates

CE

This edition replaces all previous issues. Availability, errors and specification subject to change without notice.

UNOPAL PRIVATE LIMITED
8, UBI ROAD 2, #06-20, ZERVEX
SINGAPORE 408538

TEL: +65-6747 0083
FAX: +65-6747 6041

EMAIL: unopal@singnet.com.sg
WEBSITE: www.unopal.com.sg

Long-Sensing Metal Barrel-Ni30-M30

General Data

- Metal housing
- Threaded barrel M30x1,5
- DC 3-wire
- Function display LED
- Degree of protection IP67
- Operating distance up to 30mm
- PNP/NPN output
- Standard size

Technical Data

Type	Rated operating distance S_n	Mounting	Output function	Output type	Voltage-range U_B	Rated current	Switching frequency	Ambient temperature	Connection	Mechanical Drawing
Ni30-M30-ON6L	30mm	non flush	NO	NPN	10…30VDC	≤200mA	75Hz	-25…70°C	M12 connector	1
Ni30-M30-CN6L	30mm	non flush	NC	NPN	10…30VDC	≤200mA	75Hz	-25…70°C	M12 connector	1
Ni30-M30-OP6L	30mm	non flush	NO	PNP	10…30VDC	≤200mA	75Hz	-25…70°C	M12 connector	1
Ni30-M30-CP6L	30mm	non flush	NC	PNP	10…30VDC	≤200mA	75Hz	-25…70°C	M12 connector	1
Ni30-M30-ON6L-Q12	30mm	non flush	NO	NPN	10…30VDC	≤200mA	75Hz	-25…70°C	M12 connector	2
Ni30-M30-CN6L-Q12	30mm	non flush	NC	NPN	10…30VDC	≤200mA	75Hz	-25…70°C	M12 connector	2
Ni30-M30-OP6L-Q12	30mm	non flush	NO	PNP	10…30VDC	≤200mA	75Hz	-25…70°C	M12 connector	2
Ni30-M30-CP6L-Q12	30mm	non flush	NC	PNP	10…30VDC	≤200mA	75Hz	-25…70°C	M12 connector	2

Connection Diagram

Bu = blue; Bn = brown; Bk = black; Wh = white; (1-4) = Connector pin M12

Cable

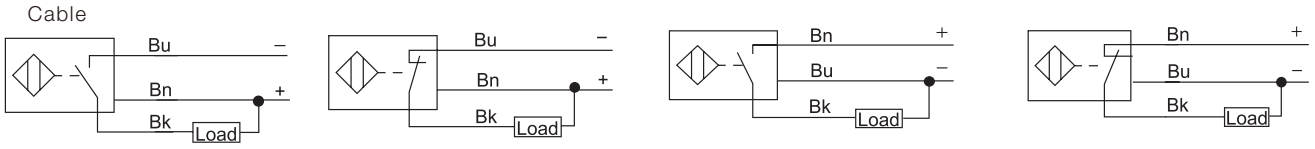

NPN NO NPN NC PNP NO PNP NC

Connector

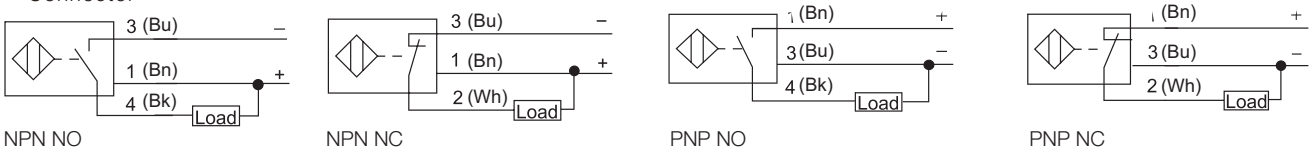

NPN NO NPN NC PNP NO PNP NC

Mechanical Drawing

Drawing 1

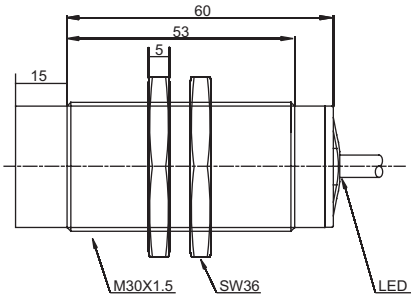

Drawing 2

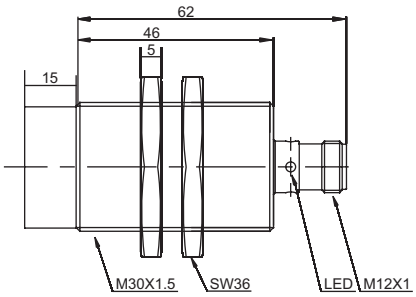

Approvals Certificates

CE

This edition replaces all previous issues. Availability, errors and specification subject to change without notice.

UNOPAL PRIVATE LIMITED
8, UBI ROAD 2, #06-20, ZERVEX
SINGAPORE 408538

TEL: +65-6747 0083
FAX: +65-6747 6041

EMAIL: unopal@singnet.com.sg
WEBSITE: www.unopal.com.sg

Long-Sensing Plastic Rectangular-W40

General Data

- Plastic housing
- Rectangular 40 x 40 mm
- DC 2-wire
- 2 function display LED's
- Degree of protection IP67
- Extended operating distance
- Connector wiring
- Variable orientation of the active
- Standardized mounting hole arrangement

Technical Data

Type	Rated operating distance S_n	Mounting	Output function	Output type	Voltage-range U_B	Rated current	Switching frequency	Ambient temperature	Connection	Mechanical Drawing
Fi25-W40-0D9L-Q12	25 mm	flush	NO	DC	10…60 VDC	≤ 200 mA	150 Hz	-25…70 °C	M12 connector	1
Ni40-W40-0D9L-Q12	40 mm	non flush	NO	DC	10…60 VDC	≤ 200 mA	150 Hz	-25…70 °C	M12 connector	1
Fi25-W40-CD9L-Q12	25 mm	flush	NC	DC	10…60 VDC	≤ 200 mA	150 Hz	-25…70 °C	M12 connector	1
Ni40-W40-CD9L-Q12	40 mm	non flush	NC	DC	10…60 VDC	≤ 200 mA	150 Hz	-25…70 °C	M12 connector	1

Connection Diagram

Bu = blue; Bn = brown; Bk = black; Wh = white; (1-4) = Connector pin M12

Connector

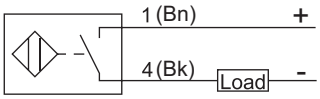

DC-2 wire NO

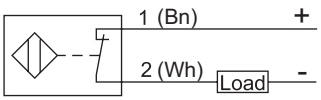

DC-2 wire NC

Mechanical Drawing

Drawing 1

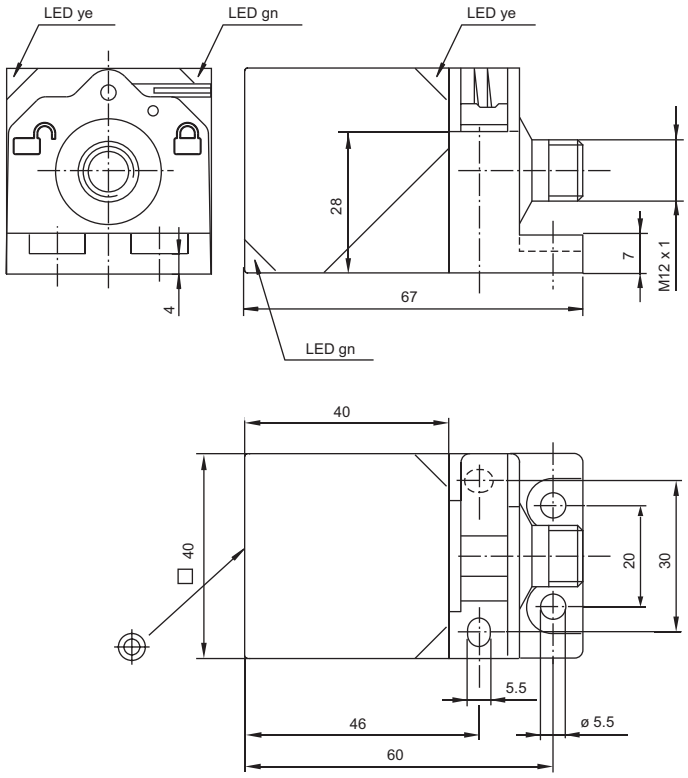

Approvals Certificates

CE

UNOPAL PRIVATE LIMITED
8, UBI ROAD 2, #06-20, ZERVEX
SINGAPORE 408538

TEL: +65-6747 0083
FAX: +65-6747 6041

EMAIL: unopal@singnet.com.sg
WEBSITE: www.unopal.com.sg

This edition replaces all previous issues. Availability, errors and specification subject to change without notice.

Long-Sensing Plastic Rectangular-W40

General Data

- Plastic housing
- Rectangular 40 x 40 mm
- DC 3/4-wire
- 2 function display LED's
- Degree of protection IP67
- Extended operating distance
- Connector wiring
- Variable orientation of the active
- Standardized mounting hole arrangement

Technical Data

Type	Rated operating distance S_n	Mounting	Output function	Output type	Voltage-range U_B	Rated current	Switching frequency	Ambient temperature	Connection	Mechanical Drawing
Fi25-W40-ON6L-Q12	25 mm	flush	NO	NPN	10…30 VDC	≤200 mA	150 Hz	-25…70 °C	M12 connector	1
Fi25-W40-CN6L-Q12	25 mm	flush	NC	NPN	10…30 VDC	≤200 mA	150 Hz	-25…70 °C	M12 connector	1
Fi25-W40-BN6L-Q12	25 mm	flush	NO+NC	NPN	10…30 VDC	≤200 mA	150 Hz	-25…70 °C	M12 connector	1
Fi25-W40-OP6L-Q12	25 mm	flush	NO	PNP	10…30 VDC	≤200 mA	150 Hz	-25…70 °C	M12 connector	1
Fi25-W40-CP6L-Q12	25 mm	flush	NC	PNP	10…30 VDC	≤200 mA	150 Hz	-25…70 °C	M12 connector	1
Fi25-W40-BP6L-Q12	25 mm	flush	NO+NC	PNP	10…30 VDC	≤200 mA	150 Hz	-25…70 °C	M12 connector	1
Ni40-W40-ON6L-Q12	40 mm	non flush	NO	NPN	10…30 VDC	≤200 mA	150 Hz	-25…70 °C	M12 connector	1
Ni40-W40-CN6L-Q12	40 mm	non flush	NC	NPN	10…30 VDC	≤200 mA	150 Hz	-25…70 °C	M12 connector	1
Ni40-W40-BN6L-Q12	40 mm	non flush	NO+NC	NPN	10…30 VDC	≤200 mA	150 Hz	-25…70 °C	M12 connector	1
Ni40-W40-OP6L-Q12	40 mm	non flush	NO	PNP	10…30 VDC	≤200 mA	150 Hz	-25…70 °C	M12 connector	1
Ni40-W40-CP6L-Q12	40 mm	non flush	NC	PNP	10…30 VDC	≤200 mA	150 Hz	-25…70 °C	M12 connector	1
Ni40-W40-BP6L-Q12	40 mm	non flush	NO+NC	PNP	10…30 VDC	≤200 mA	150 Hz	-25…70 °C	M12 connector	1

Connection Diagram

Bu = blue; Bn = brown; Bk = black; Wh = white; (1-4) = Connector pin M12

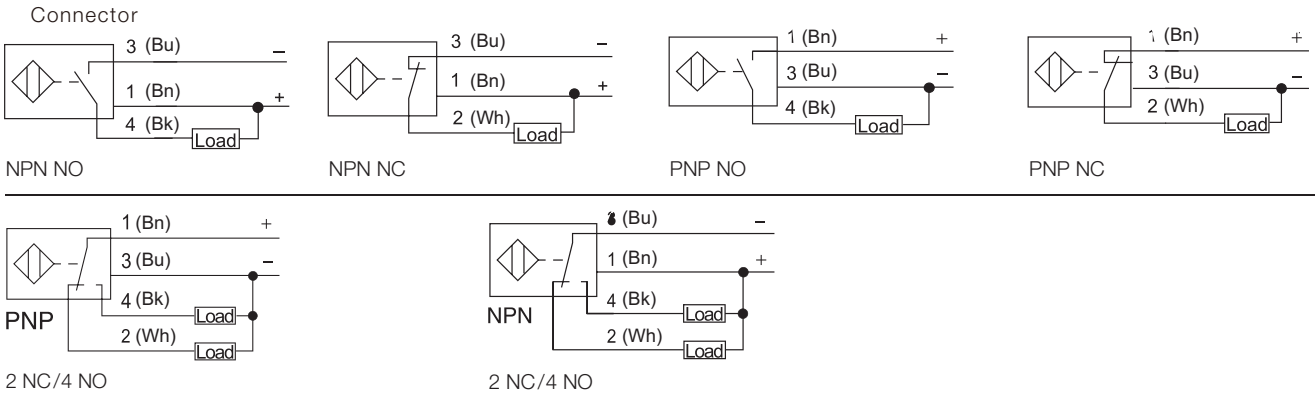

Approvals
Certificates

CE

This edition replaces all previous issues. Availability, errors and specification subject to change without notice.

UNOPAL PRIVATE LIMITED
8, UBI ROAD 2, #06-20, ZERVEX
SINGAPORE 408538

TEL: +65-6747 0083
FAX: +65-6747 6041

EMAIL: unopal@singnet.com.sg
WEBSITE: www.unopal.com.sg

Long-Sensing Plastic Rectangular-W40

Mechanical Drawing

Drawing 1

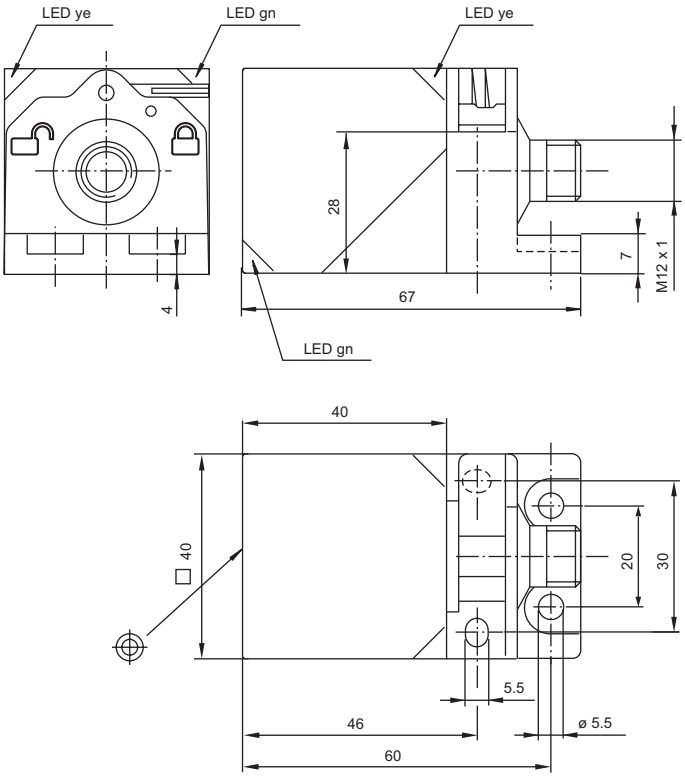

Approvals
Certificates

This edition replaces all previous issues. Availability, errors and specification subject to change without notice.

UNOPAL PRIVATE LIMITED
8, UBI ROAD 2, #06-20, ZERVEX
SINGAPORE 408538

TEL: +65-6747 0083
FAX: +65-6747 6041

EMAIL: unopal@singnet.com.sg
WEBSITE: www.unopal.com.sg

Long-Sensing Plastic Rectangular-W40

General Data

- Plastic housing
- Rectangular 40x40mm
- AC/DC 2-wire
- 2 function display LED's
- Degree of protection IP67
- Extended operating distance
- Standardized mounting hole arrangement
- Connector wiring
- Variable orientation of the active
- Standardized mounting hole arrangement

Technical Data

Type	Rated operating distance S_n	Mounting	Output function	Output type	Voltage-range U_B	Rated current	Switching frequency	Ambient temperature	Connection	Mechanical Drawing
Fi25-W40-0A41L-Q12	25mm	flush	NO	AC/DC	20…240VAC/DC	≤200mA	20Hz	-25…70°C	M12 connector	1
Ni40-W40-CA41L-Q12	40mm	non flush	NC	AC/DC	20…240VAC/DC	≤200mA	20Hz	-25…70°C	M12 connector	1

Connection Diagram

Bu = blue; Bn = brown; Bk = black; Wh = white; (1-4) = Connector pin M12

Connector

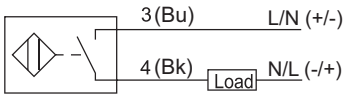

AC/DC-2 wire NO

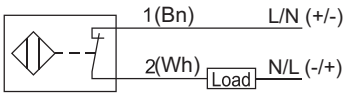

AC/DC-2 wire NC

Mechanical Drawing

Drawing 1

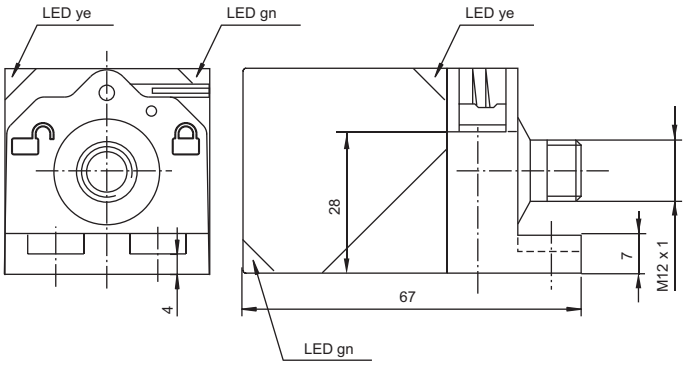

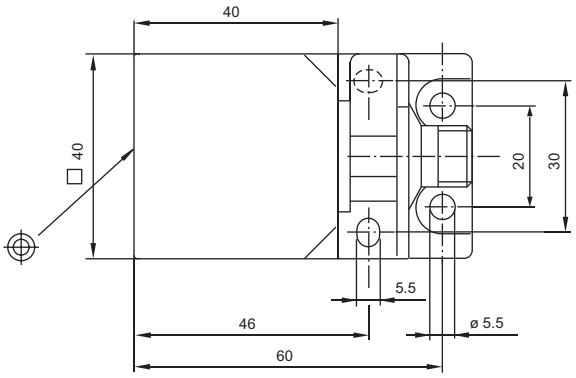

Approvals Certificates

CE

This edition replaces all previous issues. Availability, errors and specification subject to change without notice.

UNOPAL PRIVATE LIMITED
8, UBI ROAD 2, #06-20, ZERVEX
SINGAPORE 408538

TEL: +65-6747 0083
FAX: +65-6747 6041

EMAIL: unopal@singnet.com.sg
WEBSITE: www.unopal.com.sg

Long-Sensing Plastic Rectangular-W80

General Data

- Plastic housing; Rectangular 80x80mm
- DC 2-wire
- 2 function display LED's
- Degree of protection IP67
- Extended operating distance
- Screw terminals or M12 connector wiring
- Standardized mounting hole arrangement
- Wide voltage range

Technical Data

Type	Rated operating distance S_n	Mounting	Output function	Output type	Voltage-range U_B	Rated current	Switching frequency	Ambient temperature	Connection	Mechanical Drawing
Fi50-W80-OD9L-Q	50mm	flush	NO	DC	10…60VDC	≤200mA	100Hz	-25…70°C	Screw terminals	1
Ni70-W80-OD9L-Q	70mm	non flush	NO	DC	10…60VDC	≤200mA	100Hz	-25…70°C	Screw terminals	1
Fi50-W80-CD9L-Q	50mm	flush	NC	DC	10…60VDC	≤200mA	100Hz	-25…70°C	Screw terminals	1
Ni70-W80-CD9L-Q	70mm	non flush	NC	DC	10…60VDC	≤200mA	100Hz	-25…70°C	Screw terminals	1
Fi50-W80-OD9L-Q12	50mm	flush	NO	DC	10…60VDC	≤200mA	100Hz	-25…70°C	M12 connector	2
Ni70-W80-OD9L-Q12	70mm	non flush	NO	DC	10…60VDC	≤200mA	100Hz	-25…70°C	M12 connector	2
Fi50-W80-CD9L-Q12	50mm	flush	NC	DC	10…60VDC	≤200mA	100Hz	-25…70°C	M12 connector	2
Ni70-W80-CD9L-Q12	70mm	non flush	NC	DC	10…60VDC	≤200mA	100Hz	-25…70°C	M12 connector	2

Connection Diagram

Bu = blue; Bn = brown; Bk = black; Wh = white; (1-4) = Connector pin M12 / Terminals Nr.

Screw terminals/Connector

DC-2 wire NO

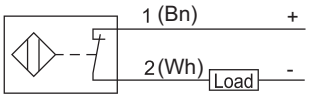

DC-2 wire NC

Mechanical Drawing

Drawing 1

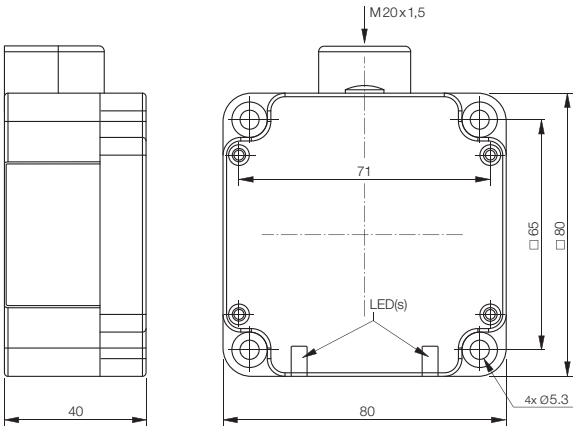

Drawing 2

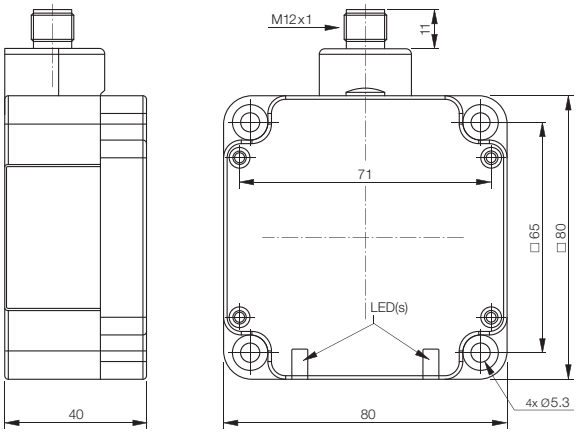

Approvals Certificates

CE

UNOPAL PRIVATE LIMITED
8, UBI ROAD 2, #06-20, ZERVEX
SINGAPORE 408538

TEL: +65-6747 0083
FAX: +65-6747 6041

EMAIL: unopal@singnet.com.sg
WEBSITE: www.unopal.com.sg

This edition replaces all previous issues. Availability, errors and specification subject to change without notice.

Long-Sensing Plastic Rectangular-W80

General Data

- Plastic housing
- Rectangular 80 x 80 mm
- DC 3/4-wire
- 2 function display LED's
- Degree of protection IP67
- Extended operating distance
- Screw terminals
- Standardized mounting hole arrangement
- Normally open / normally closed / change-over

Technical Data

Type	Rated operating distance S_n	Mounting	Output function	Output type	Voltage-range U_B	Rated current	Switching frequency	Ambient temperature	Connection	Mechanical Drawing
Fi50-W80-ON6L-Q	50 mm	flush	NO	NPN	10…30 VDC	≤200 mA	100 Hz	-25…70 °C	Screw terminals	1
Fi50-W80-CN6L-Q	50 mm	flush	NC	NPN	10…30 VDC	≤200 mA	100 Hz	-25…70 °C	Screw terminals	1
Fi50-W80-BN6L-Q	50 mm	flush	NO+NC	NPN	10…30 VDC	≤200 mA	100 Hz	-25…70 °C	Screw terminals	1
Fi50-W80-OP6L-Q	50 mm	flush	NO	PNP	10…30 VDC	≤200 mA	100 Hz	-25…70 °C	Screw terminals	1
Fi50-W80-CP6L-Q	50 mm	flush	NC	PNP	10…30 VDC	≤200 mA	100 Hz	-25…70 °C	Screw terminals	1
Fi50-W80-BP6L-Q	50 mm	flush	NO+NC	PNP	10…30 VDC	≤200 mA	100 Hz	-25…70 °C	Screw terminals	1
Ni70-W80-ON6L-Q	70 mm	non flush	NO	NPN	10…30 VDC	≤200 mA	100 Hz	-25…70 °C	Screw terminals	1
Ni70-W80-CN6L-Q	70 mm	non flush	NC	NPN	10…30 VDC	≤200 mA	100 Hz	-25…70 °C	Screw terminals	1
Ni70-W80-BN6L-Q	70 mm	non flush	NO+NC	NPN	10…30 VDC	≤200 mA	100 Hz	-25…70 °C	Screw terminals	1
Ni70-W80-OP6L-Q	70 mm	non flush	NO	PNP	10…30 VDC	≤200 mA	100 Hz	-25…70 °C	Screw terminals	1
Ni70-W80-CP6L-Q	70 mm	non flush	NC	PNP	10…30 VDC	≤200 mA	100 Hz	-25…70 °C	Screw terminals	1
Ni70-W80-BP6L-Q	70 mm	non flush	NO+NC	PNP	10…30 VDC	≤200 mA	100 Hz	-25…70 °C	Screw terminals	1

Connection Diagram

Bu = blue; Bn = brown; Bk = black; Wh = white; (1-4) = Connector pin M12 / Terminals Nr.

Screw terminals

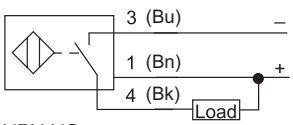

NPN NO

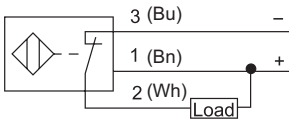

NPN NC

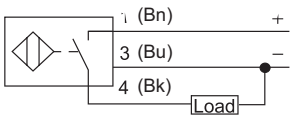

PNP NO

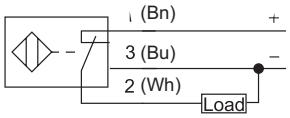

PNP NC

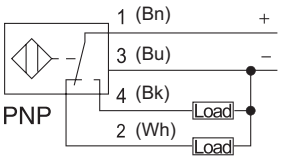

2 NC/4 NO

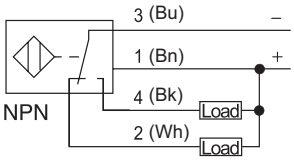

2 NC/4 NO

Mechanical Drawing

Drawing 1

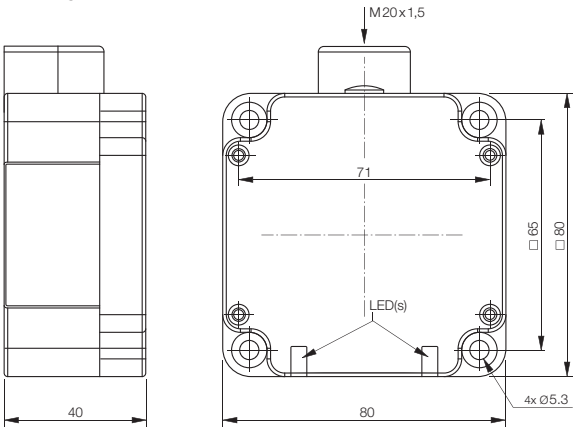

Approvals
Certificates

CE

This edition replaces all previous issues. Availability, errors and specification subject to change without notice.

UNOPAL PRIVATE LIMITED
8, UBI ROAD 2, #06-20, ZERVEX
SINGAPORE 408538

TEL: +65-6747 0083
FAX: +65-6747 6041

EMAIL: unopal@singnet.com.sg
WEBSITE: www.unopal.com.sg

Long-Sensing Plastic Rectangular-W80

General Data

- Plastic housing
- Rectangular 80x80mm
- DC 3/4-wire
- 2 function display LED's
- Degree of protection IP67
- Extended operating distance
- M12 connector wiring
- Standardized mounting hole arrangement
- Normally open / normally closed / change-over

Technical Data

Type	Rated operating distance S_n	Mounting	Output function	Output type	Voltage-range U_B	Rated current	Switching frequency	Ambient temperature	Connection	Mechanical Drawing
Fi50-W80-ON6L-Q12	50mm	flush	NO	NPN	10…30VDC	≤200mA	100Hz	-25…70°C	M12 connector	1
Fi50-W80-CN6L-Q12	50mm	flush	NC	NPN	10…30VDC	≤200mA	100Hz	-25…70°C	M12 connector	1
Fi50-W80-BN6L-Q12	50mm	flush	NO+NC	NPN	10…30VDC	≤200mA	100Hz	-25…70°C	M12 connector	1
Fi50-W80-OP6L-Q12	50mm	flush	NO	PNP	10…30VDC	≤200mA	100Hz	-25…70°C	M12 connector	1
Fi50-W80-CP6L-Q12	50mm	flush	NC	PNP	10…30VDC	≤200mA	100Hz	-25…70°C	M12 connector	1
Fi50-W80-BP6L-Q12	50mm	flush	NO+NC	PNP	10…30VDC	≤200mA	100Hz	-25…70°C	M12 connector	1
Ni70-W80-ON6L-Q12	70mm	non flush	NO	NPN	10…30VDC	≤200mA	100Hz	-25…70°C	M12 connector	1
Ni70-W80-CN6L-Q12	70mm	non flush	NC	NPN	10…30VDC	≤200mA	100Hz	-25…70°C	M12 connector	1
Ni70-W80-BN6L-Q12	70mm	non flush	NO+NC	NPN	10…30VDC	≤200mA	100Hz	-25…70°C	M12 connector	1
Ni70-W80-OP6L-Q12	70mm	non flush	NO	PNP	10…30VDC	≤200mA	100Hz	-25…70°C	M12 connector	1
Ni70-W80-CP6L-Q12	70mm	non flush	NC	PNP	10…30VDC	≤200mA	100Hz	-25…70°C	M12 connector	1
Ni70-W80-BP6L-Q12	70mm	non flush	NO+NC	PNP	10…30VDC	≤200mA	100Hz	-25…70°C	M12 connector	1

Connection Diagram

Bu = blue; Bn = brown; Bk = black; Wh = white; (1-4) = Connector pin M12 / Terminals Nr.

Connector

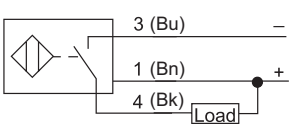

NPN NO

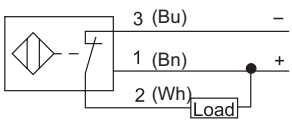

NPN NC

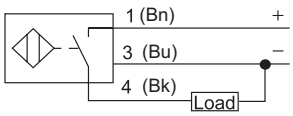

PNP NO

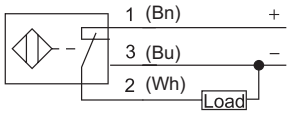

PNP NC

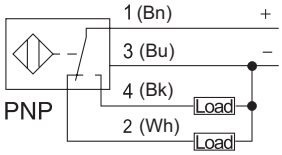

2 NC/4 NO

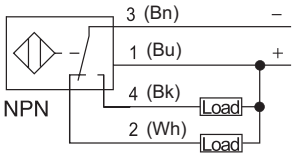

2 NC/4 NO

Mechanical Drawing

Drawing 1

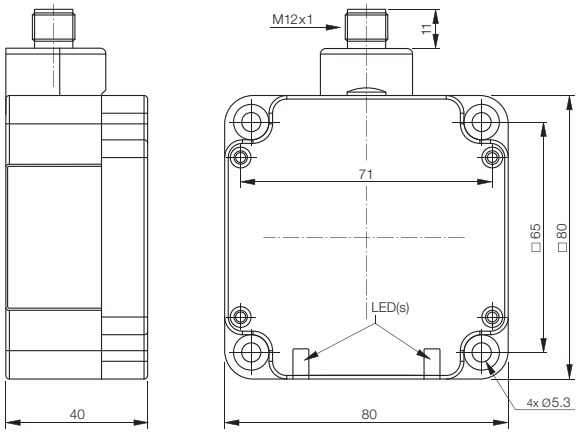

Approvals Certificates

CE

This edition replaces all previous issues. Availability, errors and specification subject to change without notice.

UNOPAL PRIVATE LIMITED
8, UBI ROAD 2, #06-20, ZERVEX
SINGAPORE 408538

TEL: +65-6747 0083
FAX: +65-6747 6041

EMAIL: unopal@singnet.com.sg
WEBSITE: www.unopal.com.sg

Long-Sensing Plastic Rectangular-W80

General Data

- Plastic housing
- Rectangular 80 x 80 mm
- AC/DC 2-wire
- 2 function display LED's
- Degree of protection IP67
- Extended operating distance
- Screw terminals or M12 connector wiring
- Standardized mounting hole arrangement
- Wide voltage range

Technical Data

Type	Rated operating distance S_n	Mounting	Output function	Output type	Voltage-range U_B	Rated current	Switching frequency	Ambient temperature	Connection	Mechanical Drawing
Fi50-W80-OA41L-Q	50 mm	flush	NO	AC/DC	20…240 VAC/DC	≤200 mA	20 Hz	-25…70 °C	Screw terminals	1
Ni70-W80-CA41L-Q	70 mm	non flush	NC	AC/DC	20…240 VAC/DC	≤200 mA	20 Hz	-25…70 °C	Screw terminals	1
Fi50-W80-VA41L-Q	50 mm	flush	NO / NC	AC/DC	20…240 VAC/DC	≤200 mA	20 Hz	-25…70 °C	Screw terminals	1
Ni70-W80-VA41L-Q	70 mm	non flush	NO / NC	AC/DC	20…240 VAC/DC	≤200 mA	20 Hz	-25…70 °C	Screw terminals	1
Fi50-W80-OA41L-Q12	50 mm	flush	NO	AC/DC	20…240 VAC/DC	≤200 mA	20 Hz	-25…70 °C	M12 connector	2
Ni70-W80-CA41L-Q12	70 mm	non flush	NC	AC/DC	20…240 VAC/DC	≤200 mA	20 Hz	-25…70 °C	M12 connector	2
Fi50-W80-VA41L-Q12	50 mm	flush	NO / NC	AC/DC	20…240 VAC/DC	≤200 mA	20 Hz	-25…70 °C	M12 connector	2
Ni70-W80-VA41L-Q12	70 mm	non flush	NO / NC	AC/DC	20…240 VAC/DC	≤200 mA	20 Hz	-25…70 °C	M12 connector	2

Connection Diagram

Bu = blue; Bn = brown; Bk = black; Wh = white; (1-4) = Connector pin M12 / Terminals Nr.

Connector/Screw terminals

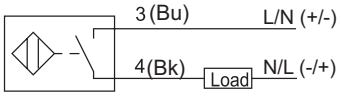

AC/DC-2 wire NO

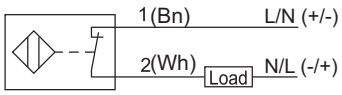

AC/DC-2 wire NC

Mechanical Drawing

Drawing 1

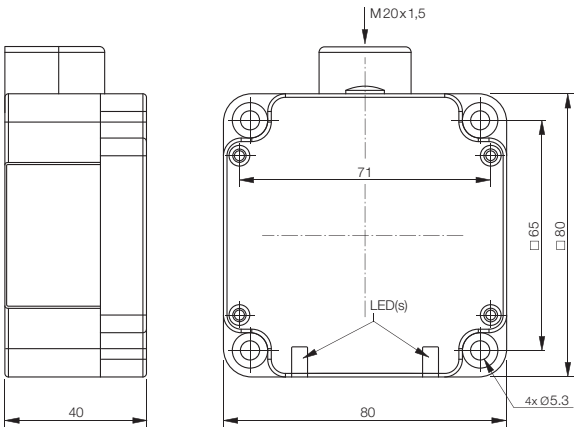

Drawing 2

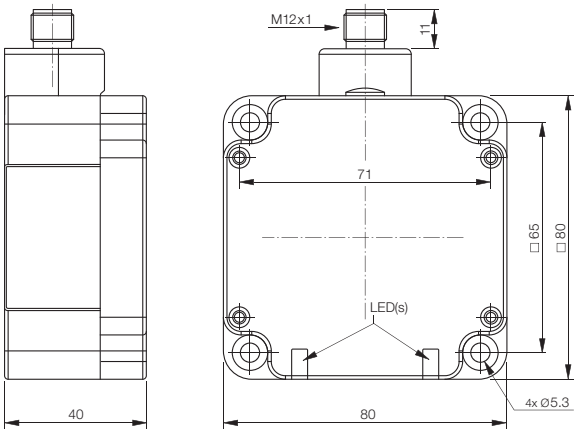

Approvals Certificates

CE

This edition replaces all previous issues. Availability, errors and specification subject to change without notice.

UNOPAL PRIVATE LIMITED
8, UBI ROAD 2, #06-20, ZERVEX
SINGAPORE 408538

TEL: +65-6747 0083
FAX: +65-6747 6041

EMAIL: unopal@singnet.com.sg
WEBSITE: www.unopal.com.sg

Long-Sensing Plastic Rectangular-WL40

General Data

- Plastic housing
- Rectangular 40x40x118mm
- DC 2-wire
- 2 function display LED's
- Degree of protection IP67
- Variable orientation of the active
- Extended operating distance
- Screw terminals
- Wide voltage range
- Standardized mounting hole arrangement

Technical Data

Type	Rated operating distance S_n	Mounting	Output function	Output type	Voltage-range U_B	Rated current	Switching frequency	Ambient temperature	Connection	Mechanical Drawing
Fi25-WL40-OD9L-Q	25mm	flush	NO	DC	10…60VDC	≤200mA	150Hz	-25…70°C	Screw terminals	1
Ni40-WL40-OD9L-Q	40mm	non flush	NO	DC	10…60VDC	≤200mA	150Hz	-25…70°C	Screw terminals	1
Fi25-WL40-CD9L-Q	25mm	flush	NC	DC	10…60VDC	≤200mA	150Hz	-25…70°C	Screw terminals	1
Ni40-WL40-CD9L-Q	40mm	non flush	NC	DC	10…60VDC	≤200mA	150Hz	-25…70°C	Screw terminals	1

Connection Diagram

Bu = blue; Bn = brown; Bk = black; Wh = white; (1-4) = Connector pin M12 / Terminals Nr.

Screw terminals

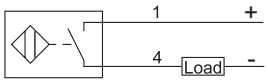

DC-2 wire NO

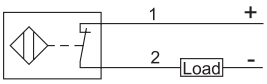

DC-2 wire NC

Mechanical Drawing

Drawing 1

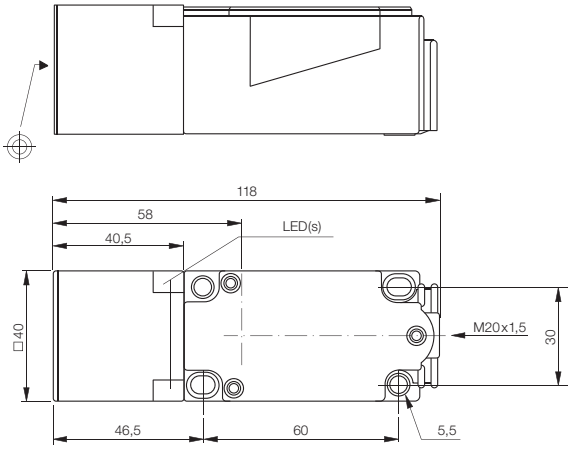

Approvals
Certificates

CE

This edition replaces all previous issues. Availability, errors and specification subject to change without notice.

UNOPAL PRIVATE LIMITED
8, UBI ROAD 2, #06-20, ZERVEX
SINGAPORE 408538

TEL: +65-6747 0083
FAX: +65-6747 6041

EMAIL: unopal@singnet.com.sg
WEBSITE: www.unopal.com.sg

Long-Sensing Plastic Rectangular-WL40

General Data

- Plastic housing; Rectangular 40x40x118mm
- DC 3/4-wire
- 2 function display LED's
- Degree of protection IP67
- Variable orientation of the active
- Extended operating distance
- Screw terminals
- Standardized mounting hole arrangement
- Normally open / normally closed / change-over

Technical Data

Type	Rated operating distance S_n	Mounting	Output function	Output type	Voltage-range U_B	Rated current	Switching frequency	Ambient temperature	Connection	Mechanical Drawing
Fi25-WL40-ON6L-Q	25mm	flush	NO	NPN	10…30VDC	≤200mA	150Hz	-25…70°C	Screw terminals	1
Fi25-WL40-CN6L-Q	25mm	flush	NC	NPN	10…30VDC	≤200mA	150Hz	-25…70°C	Screw terminals	1
Fi25-WL40-BN6L-Q	25mm	flush	NO+NC	NPN	10…30VDC	≤200mA	150Hz	-25…70°C	Screw terminals	1
Fi25-WL40-OP6L-Q	25mm	flush	NO	PNP	10…30VDC	≤200mA	150Hz	-25…70°C	Screw terminals	1
Fi25-WL40-CP6L-Q	25mm	flush	NC	PNP	10…30VDC	≤200mA	150Hz	-25…70°C	Screw terminals	1
Fi25-WL40-BP6L-Q	25mm	flush	NO+NC	PNP	10…30VDC	≤200mA	150Hz	-25…70°C	Screw terminals	1
Ni40-WL40-ON6L-Q	40mm	non flush	NO	NPN	10…30VDC	≤200mA	150Hz	-25…70°C	Screw terminals	1
Ni40-WL40-CN6L-Q	40mm	non flush	NC	NPN	10…30VDC	≤200mA	150Hz	-25…70°C	Screw terminals	1
Ni40-WL40-BN6L-Q	40mm	non flush	NO+NC	NPN	10…30VDC	≤200mA	150Hz	-25…70°C	Screw terminals	1
Ni40-WL40-OP6L-Q	40mm	non flush	NO	PNP	10…30VDC	≤200mA	150Hz	-25…70°C	Screw terminals	1
Ni40-WL40-CP6L-Q	40mm	non flush	NC	PNP	10…30VDC	≤200mA	150Hz	-25…70°C	Screw terminals	1
Ni40-WL40-BP6L-Q	40mm	non flush	NO+NC	PNP	10…30VDC	≤200mA	150Hz	-25…70°C	Screw terminals	1

Connection Diagram

Bu = blue; Bn = brown; Bk = black; Wh = white; (1-4) = Connector pin M12 / Terminals Nr.

Screw terminals

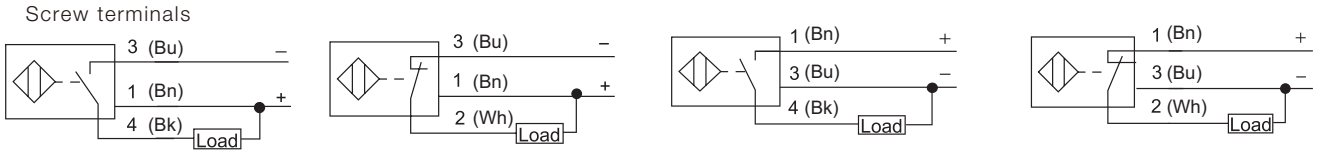

NPN NO NPN NC PNP NO PNP NC

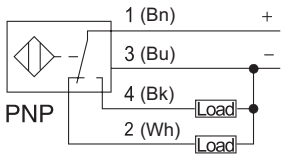

2 NC/4 NO

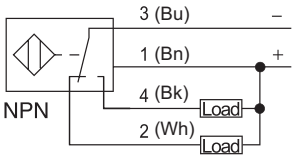

2 NC/4 NO

Mechanical Drawing

Drawing 1

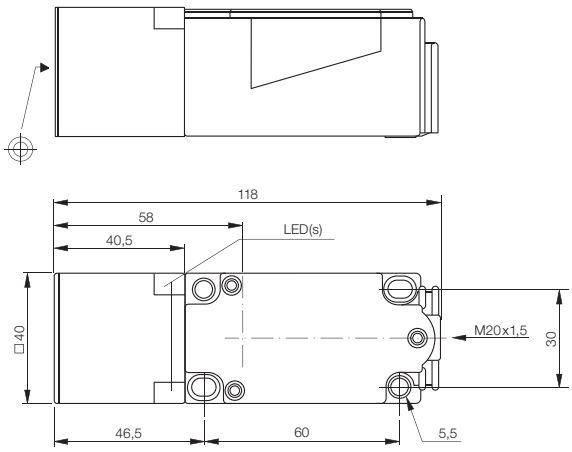

Approvals
Certificates

CE

UNOPAL PRIVATE LIMITED
8, UBI ROAD 2, #06-20, ZERVEX
SINGAPORE 408538

TEL: +65-6747 0083
FAX: +65-6747 6041

EMAIL: unopal@singnet.com.sg
WEBSITE: www.unopal.com.sg

This edition replaces all previous issues. Availability, errors and specification subject to change without notice.

Long-Sensing Plastic Rectangular-WL40

General Data

- Plastic housing; Rectangular 40x40x118mm
- AC/DC 2-wire
- 2 function display LED's
- Degree of protection IP67
- Variable orientation of the active
- Extended operating distance
- Screw terminals
- Standardized mounting hole arrangement
- Normally open / normally closed / change-over

Technical Data

Type	Rated operating distance S_n	Mounting	Output function	Output type	Voltage-range U_B	Rated current	Switching frequency	Ambient temperature	Connection	Mechanical Drawing
Fi25-WL40-OA41L-Q	25mm	flush	NO	AC/DC	20…240VAC/DC	≤200mA	20Hz	-25…70°C	Screw terminals	1
Ni40-WL40-CA41L-Q	40mm	non flush	NC	AC/DC	20…240VAC/DC	≤200mA	20Hz	-25…70°C	Screw terminals	1
Fi25-WL40-VA41L-Q	25mm	flush	NO / NC	AC/DC	20…240VAC/DC	≤200mA	20Hz	-25…70°C	Screw terminals	1
Ni40-WL40-VA41L-Q	40mm	non flush	NO / NC	AC/DC	20…240VAC/DC	≤200mA	20Hz	-25…70°C	Screw terminals	1

Connection Diagram

Bu = blue; Bn = brown; Bk = black; Wh = white; (1-4) = Connector pin M12 / Terminals Nr.

Screw terminals

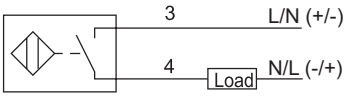

AC/DC-2 wire NO

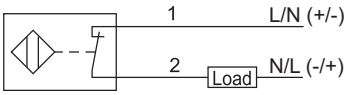

AC/DC-2 wire NC

Mechanical Drawing

Drawing 1

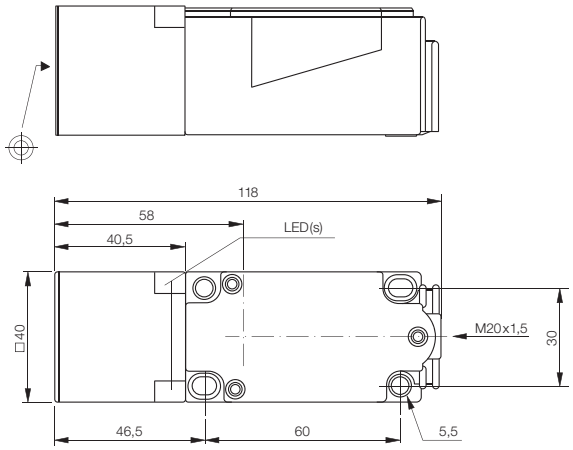

Approvals
Certificates

CE

This edition replaces all previous issues. Availability, errors and specification subject to change without notice.

UNOPAL PRIVATE LIMITED
8, UBI ROAD 2, #06-20, ZERVEX
SINGAPORE 408538

TEL: +65-6747 0083
FAX: +65-6747 6041

EMAIL: unopal@singnet.com.sg
WEBSITE: www.unopal.com.sg

All-Metal Inductive Sensor-M12

General Data

- Stainless steel housing
- Threaded barrel
- DC 3-wire
- Function display LED
- Degree of protection IP68
- Compact stainless steel housing
- Temperature range: -30...85℃
- Resistant against magnetic field
- Ferromagnetic metal detection
- PUR cable (cable)

Technical Data

Type	Rated operating distance S_n	Mounting	Output function	Output type	Voltage-range U_B	Rated current	Switching frequency	Ambient temperature	Connection	Mechanical Drawing
Fi2-AM12-ON6L	2mm	flush	NPN	NO	10…30VDC	≤200mA	300KHz	-25…70°C	2m cable	1
Fi2-AM12-CN6L	2mm	flush	NPN	NC	10…30VDC	≤200mA	300KHz	-25…70°C	2m cable	1
Fi2-AM12-OP6L	2mm	flush	PNP	NO	10…30VDC	≤200mA	300KHz	-25…70°C	2m cable	1
Fi2-AM12-CP6L	2mm	flush	PNP	NC	10…30VDC	≤200mA	300KHz	-25…70°C	2m cable	1
Ni4-AM12-ON6L	4mm	non flush	NPN	NO	10…30VDC	≤200mA	300 KHz	-25…70°C	2m cable	2
Ni4-AM12-CN6L	4mm	non flush	NPN	NC	10…30VDC	≤200mA	300KHz	-25…70°C	2m cable	2
Ni4-AM12-OP6L	4mm	non flush	PNP	NO	10…30VDC	≤200mA	300KHz	-25…70°C	2m cable	2
Ni4-AM12-CP6L	4mm	non flush	PNP	NC	10…30VDC	≤200mA	300KHz	-25…70°C	2m cable	2
Fi2-AM12-ON6L-Q12	2mm	flush	NPN	NO	10…30VDC	≤200mA	300KHz	-25…70°C	M12 Connector	3
Fi2-AM12-CN6L-Q12	2mm	flush	NPN	NC	10…30VDC	≤200mA	300KHz	-25…70°C	M12 Connector	3
Fi2-AM12-OP6L-Q12	2mm	flush	PNP	NO	10…30VDC	≤200mA	300KHz	-25…70°C	M12 Connector	3
Fi2-AM12-CP6L-Q12	2mm	flush	PNP	NC	10…30VDC	≤200mA	300KHz	-25…70°C	M12 Connector	3
Ni4-AM12-ON6L-Q12	4mm	non flush	NPN	NO	10…30VDC	≤200mA	300KHz	-25…70°C	M12 Connector	4
Ni4-AM12-CN6L-Q12	4mm	non flush	NPN	NC	10…30VDC	≤200mA	300KHz	-25…70°C	M12 Connector	4
Ni4-AM12-OP6L-Q12	4mm	non flush	PNP	NO	10…30VDC	≤200mA	300KHz	-25…70°C	M12 Connector	4
Ni4-AM12-CP6L-Q12	4mm	non flush	PNP	NC	10…30VDC	≤200mA	300KHz	-25…70°C	M12 Connector	4

Connection Diagram

Cable

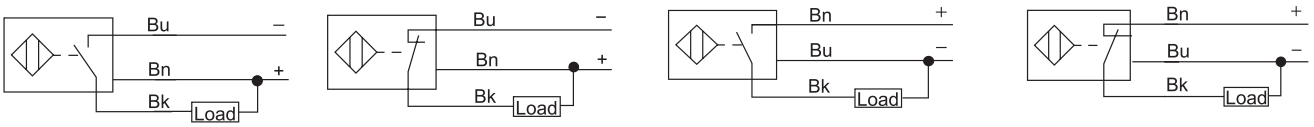

NPN NO NPN NC PNP NO PNP NC

Connector

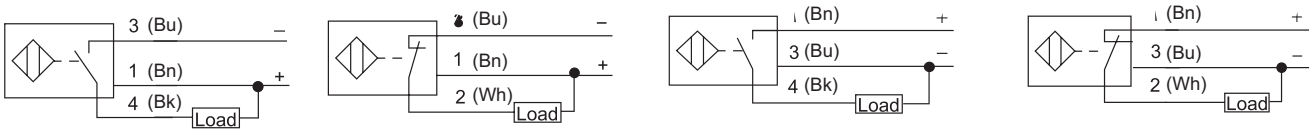

NPN NO NPN NC PNP NO PNP NC

Approvals Certificates

CE

This edition replaces all previous issues. Availability, errors and specification subject to change without notice.

UNOPAL PRIVATE LIMITED
8, UBI ROAD 2, #06-20, ZERVEX
SINGAPORE 408538

TEL: +65-6747 0083
FAX: +65-6747 6041

EMAIL: unopal@singnet.com.sg
WEBSITE: www.unopal.com.sg

All-Metal Inductive Sensor-M12

Mechanical Drawing

Drawing 1

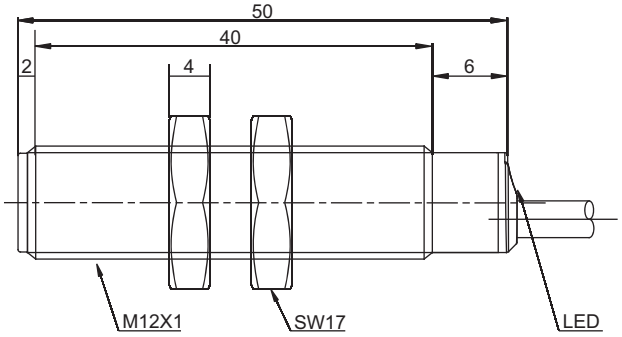

Drawing 2

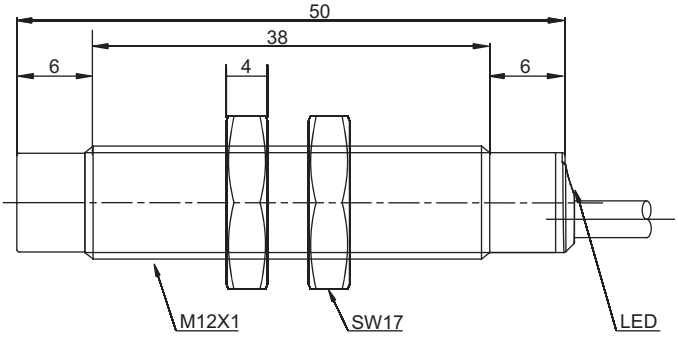

Drawing 3

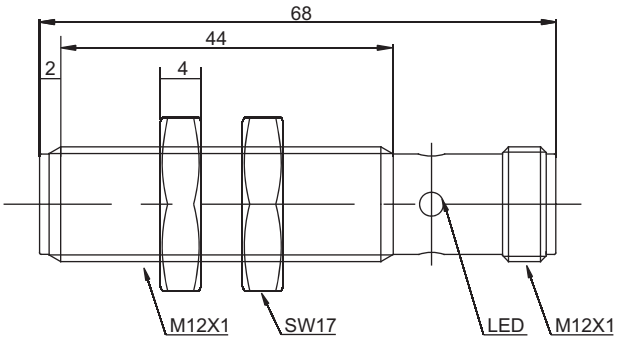

Drawing 4

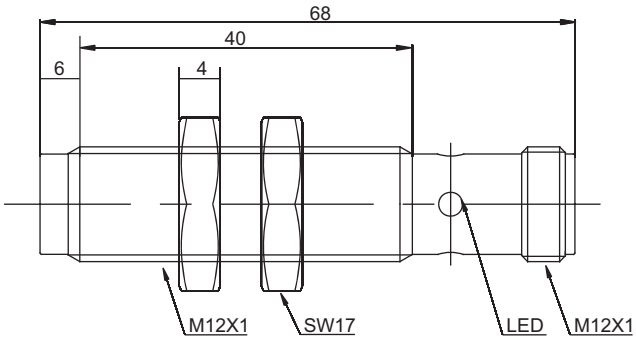

Approvals
Certificates

CE

This edition replaces all previous issues. Availability, errors and specification subject to change without notice.

UNOPAL PRIVATE LIMITED
8, UBI ROAD 2, #06-20, ZERVEX
SINGAPORE 408538

TEL: +65-6747 0083
FAX: +65-6747 6041

EMAIL: unopal@singnet.com.sg
WEBSITE: www.unopal.com.sg

All-Metal Inductive Sensor-M18

General Data

- Stainless steel housing
- Threaded barrel
- DC 3-wire
- Function display LED
- Degree of protection IP68
- Compact stainless steel housing
- Temperature range: -30...85℃
- Resistant against magnetic field
- Ferromagnetic metal detection
- PUR cable (cable)

Technical Data

Type	Rated operating distance S_n	Mounting	Output function	Output type	Voltage-range U_B	Rated current	Switching frequency	Ambient temperature	Connection	Mechanical Drawing
Fi5-AM18-ON6L	5mm	flush	NPN	NO	10…30VDC	≤200mA	300KHz	-25…70°C	2m cable	1
Fi5-AM18-CN6L	5mm	flush	NPN	NC	10…30VDC	≤200mA	300KHz	-25…70°C	2m cable	1
Fi5-AM18-OP6L	5mm	flush	PNP	NO	10…30VDC	≤200mA	300KHz	-25…70°C	2m cable	1
Fi5-AM18-CP6L	5mm	flush	PNP	NC	10…30VDC	≤200mA	300KHz	-25…70°C	2m cable	1
Ni8-AM18-ON6L	8mm	non flush	NPN	NO	10…30VDC	≤200mA	300KHz	-25…70°C	2m cable	2
Ni8-AM18-CN6L	8mm	non flush	NPN	NC	10…30VDC	≤200mA	300KHz	-25…70°C	2m cable	2
Ni8-AM18-OP6L	8mm	non flush	PNP	NO	10…30VDC	≤200mA	300KHz	-25…70°C	2m cable	2
Ni8-AM18-CP6L	8mm	non flush	PNP	NC	10…30VDC	≤200mA	300KHz	-25…70°C	2m cable	2
Fi5-AM18-ON6L-Q12	5mm	flush	NPN	NO	10…30VDC	≤200mA	300KHz	-25…70°C	M12 Connector	3
Fi5-AM18-CN6L-Q12	5mm	flush	NPN	NC	10…30VDC	≤200mA	300KHz	-25…70°C	M12 Connector	3
Fi5-AM18-OP6L-Q12	5mm	flush	PNP	NO	10…30VDC	≤200mA	300KHz	-25…70°C	M12 Connector	3
Fi5-AM18-CP6L-Q12	5mm	flush	PNP	NC	10…30VDC	≤200mA	300KHz	-25…70°C	M12 Connector	3
Ni8-AM18-ON6L-Q12	8mm	non flush	NPN	NO	10…30VDC	≤200mA	300KHz	-25…70°C	M12 Connector	4
Ni8-AM18-CN6L-Q12	8mm	non flush	NPN	NC	10…30VDC	≤200mA	300KHz	-25…70°C	M12 Connector	4
Ni8-AM18-OP6L-Q12	8mm	non flush	PNP	NO	10…30VDC	≤200mA	300KHz	-25…70°C	M12 Connector	4
Ni8-AM18-CP6L-Q12	8mm	non flush	PNP	NC	10…30VDC	≤200mA	300KHz	-25…70°C	M12 Connector	4

Connection Diagram

Cable

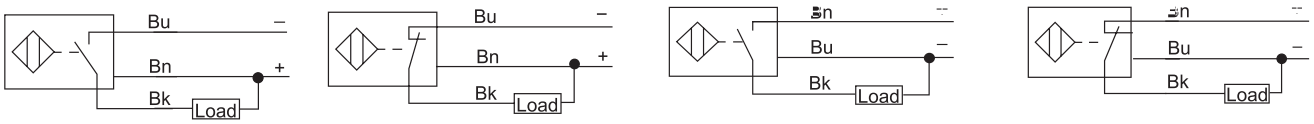

NPN NO NPN NC PNP NO PNP NC

Connector

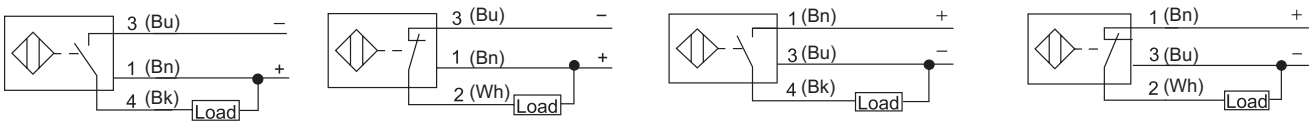

NPN NO NPN NC PNP NO PNP NC

Approvals Certificates

CE

This edition replaces all previous issues. Availability, errors and specification subject to change without notice.

UNOPAL PRIVATE LIMITED
8, UBI ROAD 2, #06-20, ZERVEX
SINGAPORE 408538

TEL: +65-6747 0083
FAX: +65-6747 6041

EMAIL: unopal@singnet.com.sg
WEBSITE: www.unopal.com.sg

All-Metal Inductive Sensor-M18

Mechanical Drawing

Drawing 1

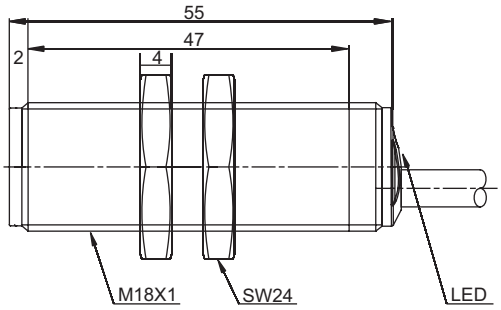

Drawing 2

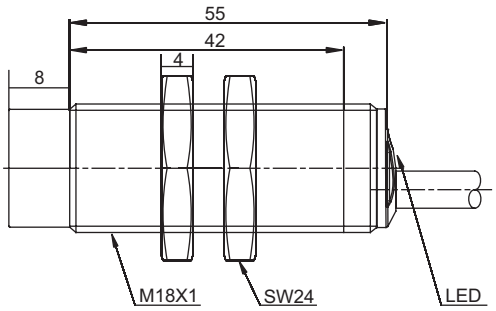

Drawing 3

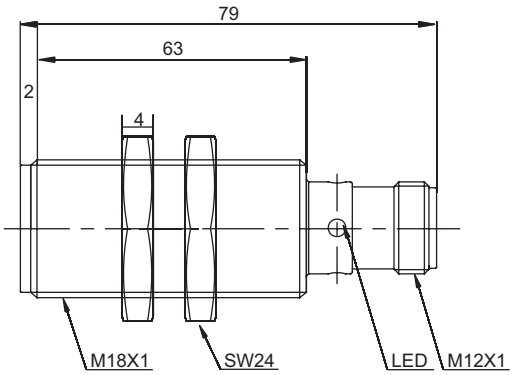

Drawing 4

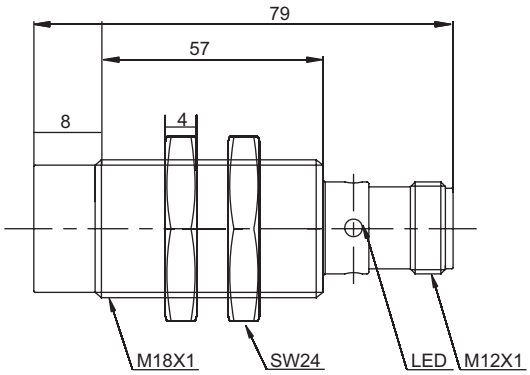

Approvals
Certificates

CE

This edition replaces all previous issues. Availability, errors and specification subject to change without notice.

UNOPAL PRIVATE LIMITED
8, UBI ROAD 2, #06-20, ZERVEX
SINGAPORE 408538

TEL: +65-6747 0083
FAX: +65-6747 6041

EMAIL: unopal@singnet.com.sg
WEBSITE: www.unopal.com.sg

All-Metal Inductive Sensor-M30

General Data

- Stainless steel housing
- Threaded barrel
- DC 3-wire
- Function display LED
- Degree of protection IP68
- Temperature range: -30...85℃
- Resistant against magnetic field
- Ferromagnetic metal detection
- PUR cable (cable)

Technical Data

Type	Rated operating distance S_n	Mounting	Output function	Output type	Voltage-range U_B	Rated current	Switching frequency	Ambient temperature	Connection	Mechanical Drawing
Fi10-AM30-ON6L	10 mm	flush	NPN	NO	10…30VDC	≤200mA	150KHz	-25…70°C	2m cable	1
Fi10-AM30-CN6L	10 mm	flush	NPN	NC	10…30VDC	≤200mA	150KHz	-25…70°C	2m cable	1
Fi10-AM30-OP6L	10 mm	flush	PNP	NO	10…30VDC	≤200mA	150KHz	-25…70°C	2m cable	1
Fi10-AM30-CP6L	10 mm	flush	PNP	NC	10…30VDC	≤200mA	150KHz	-25…70°C	2m cable	1
Ni15-AM30-ON6L	15 mm	non flush	NPN	NO	10…30VDC	≤200mA	150KHz	-25…70°C	2m cable	2
Ni15-AM30-CN6L	15 mm	non flush	NPN	NC	10…30VDC	≤200mA	150KHz	-25…70°C	2m cable	2
Ni15-AM30-OP6L	15 mm	non flush	PNP	NO	10…30VDC	≤200mA	150KHz	-25…70°C	2m cable	2
Ni15-AM30-CP6L	15 mm	non flush	PNP	NC	10…30VDC	≤200mA	150KHz	-25…70°C	2m cable	2
Fi10-AM30-ON6L-Q12	10 mm	flush	NPN	NO	10…30VDC	≤200mA	150KHz	-25…70°C	M12 Connector	3
Fi10-AM30-CN6L-Q12	10 mm	flush	NPN	NC	10…30VDC	≤200mA	150KHz	-25…70°C	M12 Connector	3
Fi10-AM30-OP6L-Q12	10 mm	flush	PNP	NO	10…30VDC	≤200mA	150KHz	-25…70°C	M12 Connector	3
Fi10-AM30-CP6L-Q12	10 mm	flush	PNP	NC	10…30VDC	≤200mA	150KHz	-25…70°C	M12 Connector	3
Ni15-AM30-ON6L-Q12	15 mm	non flush	NPN	NO	10…30VDC	≤200mA	150KHz	-25…70°C	M12 Connector	4
Ni15-AM30-CN6L-Q12	15 mm	non flush	NPN	NC	10…30VDC	≤200mA	150KHz	-25…70°C	M12 Connector	4
Ni15-AM30-OP6L-Q12	15 mm	non flush	PNP	NO	10…30VDC	≤200mA	150KHz	-25…70°C	M12 Connector	4
Ni15-AM30-CP6L-Q12	15 mm	non flush	PNP	NC	10…30VDC	≤200mA	150KHz	-25…70°C	M12 Connector	4

Connection Diagram

Cable

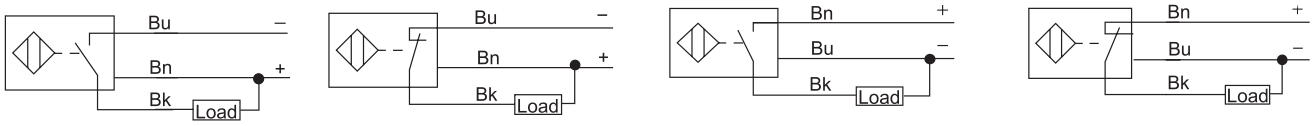

NPN NO NPN NC PNP NO PNP NC

Connector

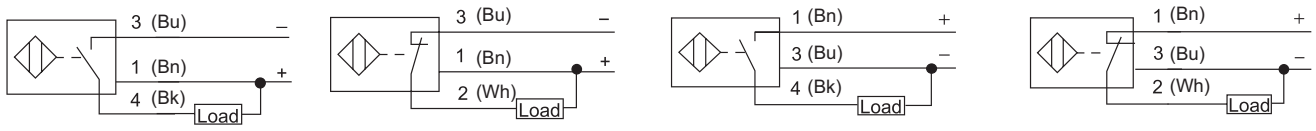

NPN NO NPN NC PNP NO PNP NC

Approvals Certificates

CE

This edition replaces all previous issues. Availability, errors and specification subject to change without notice.

UNOPAL PRIVATE LIMITED
8, UBI ROAD 2, #06-20, ZERVEX
SINGAPORE 408538

TEL: +65-6747 0083
FAX: +65-6747 6041

EMAIL: unopal@singnet.com.sg
WEBSITE: www.unopal.com.sg

All-Metal Inductive Sensor-M30

Mechanical Drawing

Drawing 1

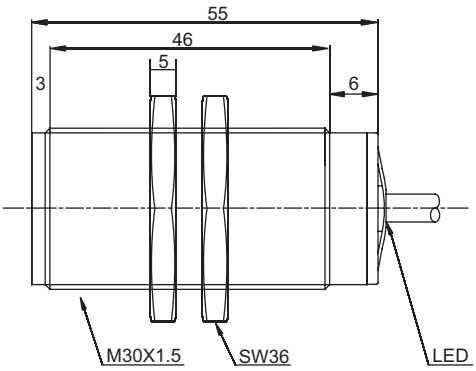

Drawing 2

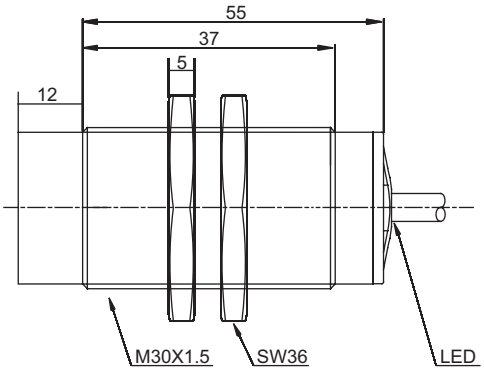

Drawing 3

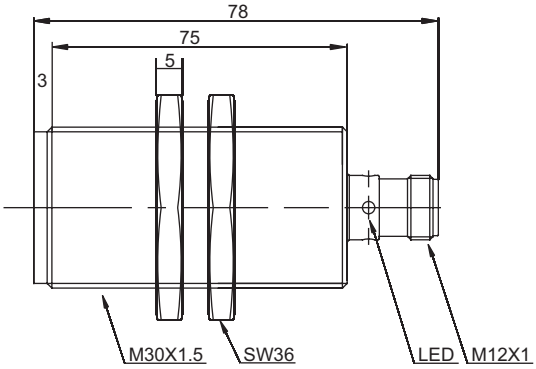

Drawing 4

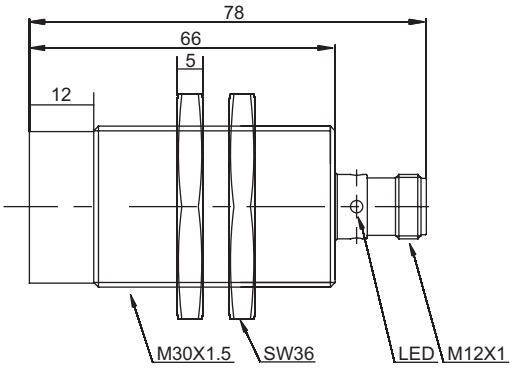

Approvals
Certificates

CE

This edition replaces all previous issues. Availability, errors and specification subject to change without notice.

UNOPAL PRIVATE LIMITED
8, UBI ROAD 2, #06-20, ZERVEX
SINGAPORE 408538

TEL: +65-6747 0083
FAX: +65-6747 6041

EMAIL: unopal@singnet.com.sg
WEBSITE: www.unopal.com.sg

NAMUR

General Data

- Metal housing
- Threaded barrel
- Short version
- Standard operating voltage for explosion-proof applications
- To be connected to a switch amplifier
- Degree of protection IP67
- High switching frequency
- Flush/non flush mounting

Technical Data

Type	Rated operating distance S_n	Mounting	Output	Voltage-range U_B	Rated current	Switching frequency	Ambient temperature	Connection	Mechanical Drawing
Fi1.5-KM08S-NE	1,5 mm	flush	NAMUR	7,7…9 VDC	≥2,2 mA (non-triggered) ≤1 mA (triggered)	2500 Hz	-25…70 °C	2 m cable	1
Ni2-KM08S-NE	2 mm	non flush	NAMUR	7,7…9 VDC	≥2,2 mA (non-triggered) ≤1 mA (triggered)	2000 Hz	-25…70 °C	2 m cable	2
Fi2-M12S-NE	2 mm	flush	NAMUR	7,7…9 VDC	≥2,2 mA (non-triggered) ≤1 mA (triggered)	2000 Hz	-25…70 °C	2 m cable	3
Ni4-M12S-NE	4 mm	non flush	NAMUR	7,7…9 VDC	≥2,2 mA (non-triggered) ≤1 mA (triggered)	1500 Hz	-25…70 °C	2 m cable	4
Fi5-M18S-NE	5 mm	flush	NAMUR	7,7…9 VDC	≥2,2 mA (non-triggered) ≤1 mA (triggered)	1500 Hz	-25…70 °C	2 m cable	5
Ni8-M18S-NE	8 mm	non flush	NAMUR	7,7…9 VDC	≥2,2 mA (non-triggered) ≤1 mA (triggered)	1000 Hz	-25…70 °C	2 m cable	6
Fi10-M30S-NE	10 mm	flush	NAMUR	7,7…9 VDC	≥2,2 mA (non-triggered) ≤1 mA (triggered)	1000 Hz	-25…70 °C	2 m cable	7
Ni15-M30S-NE	15 mm	non flush	NAMUR	7,7…9 VDC	≥2,2 mA (non-triggered) ≤1 mA (triggered)	800 Hz	-25…70 °C	2 m cable	8

Connection Diagram

Bu = blue; Bn = brown; Bk = black; Wh = white

Cable

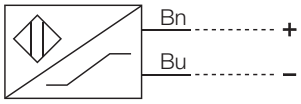

Mechanical Drawing

Drawing 1

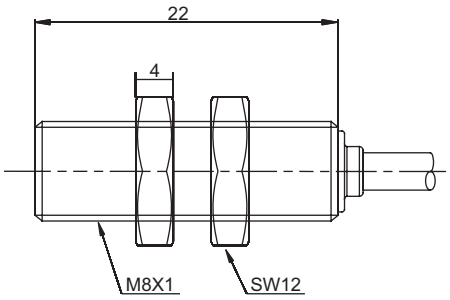

Drawing 2

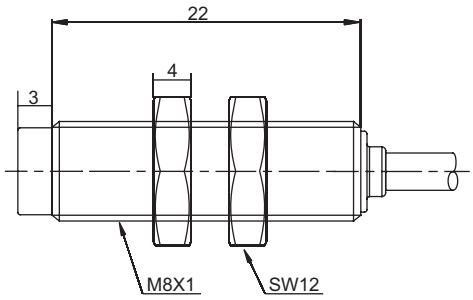

Approvals
Certificates

CE

This edition replaces all previous issues. Availability, errors and specification subject to change without notice.

UNOPAL PRIVATE LIMITED
8, UBI ROAD 2, #06-20, ZERVEX
SINGAPORE 408538

TEL: +65-6747 0083
FAX: +65-6747 6041

EMAIL: unopal@singnet.com.sg
WEBSITE: www.unopal.com.sg

NAMUR

Mechanical Drawing

Drawing 1

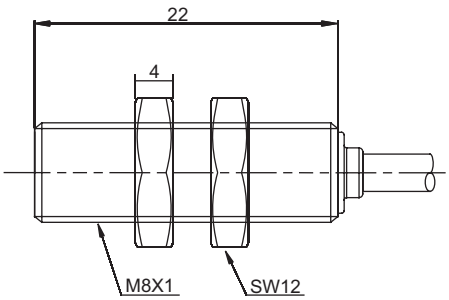

Drawing 2

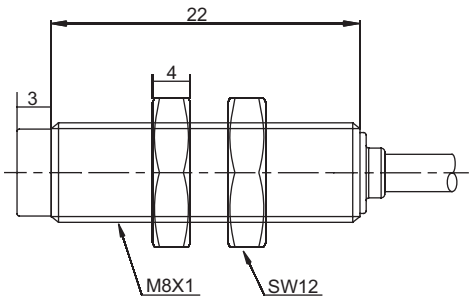

Drawing 3

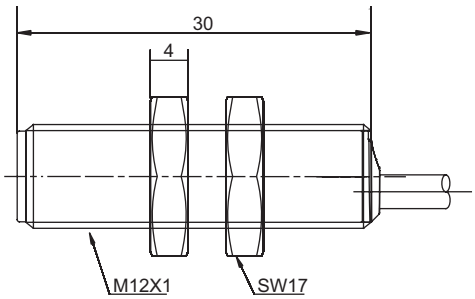

Drawing 4

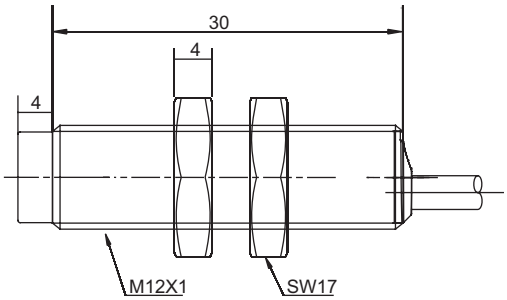

Drawing 5

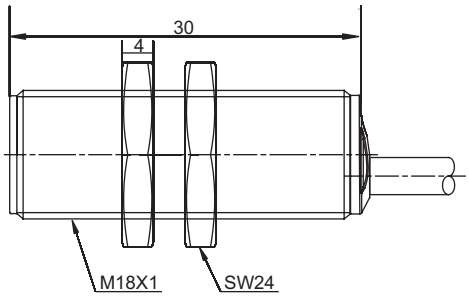

Drawing 6

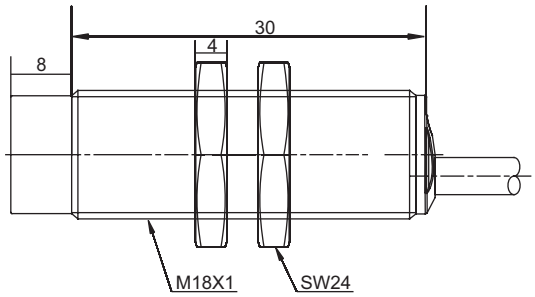

Drawing 7

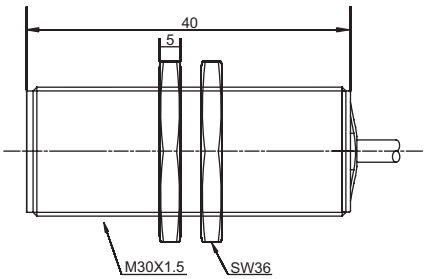

Drawing 8

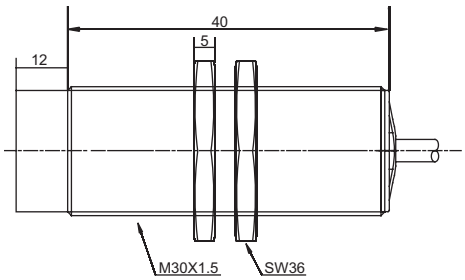

Approvals
Certificates

This edition replaces all previous issues. Availability, errors and specification subject to change without notice.

UNOPAL PRIVATE LIMITED
8, UBI ROAD 2, #06-20, ZERVEX
SINGAPORE 408538

TEL: +65-6747 0083
FAX: +65-6747 6041

EMAIL: unopal@singnet.com.sg
WEBSITE: www.unopal.com.sg

NAMUR

General Data

- Rectangular 40 x 40 mm
- Standard operating voltage for explosion-proof applications
- To be connected to a switch amplifier
- Degree of protection IP67
- High switching frequency

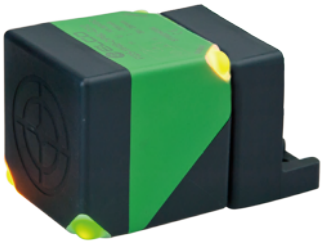

Technical Data

Type	Rated operating distance S_n	Mounting	Output	Voltage-range U_B	Rated current	Switching frequency	Ambient temperature	Connection	Mechanical Drawing
Ni40-W40-NE-Q12	40mm	non flush	NAMUR	7,7…9VDC	≥2,2mA (non-triggered) ≤1mA (triggered)	150Hz	-25…70°C	Q12 connector	1

Connection Diagram

Bu = blue; Bn = brown; Bk = black; Wh = white

Connector

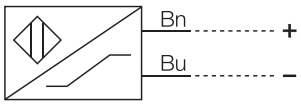

Mechanical Drawing

Drawing 1

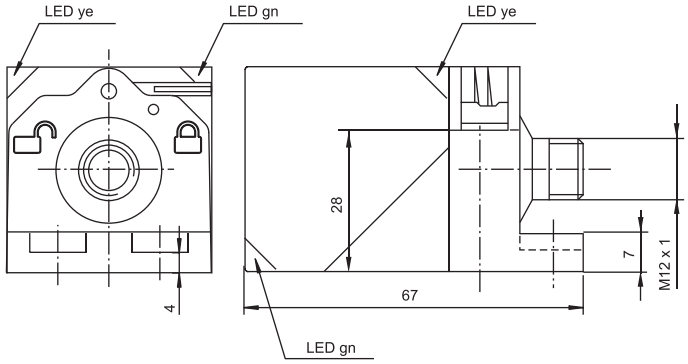

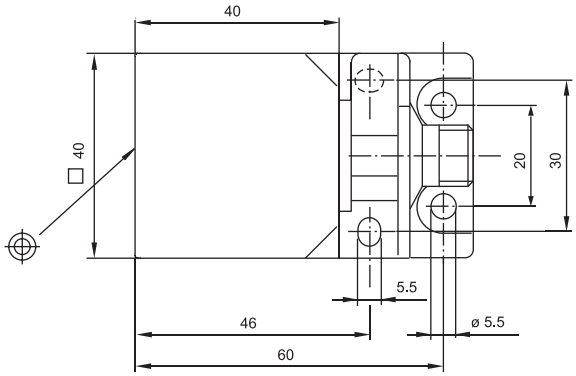

Approvals
Certificates

CE

This edition replaces all previous issues. Availability, errors and specification subject to change without notice.

UNOPAL PRIVATE LIMITED
8, UBI ROAD 2, #06-20, ZERVEX
SINGAPORE 408538

TEL: +65-6747 0083
FAX: +65-6747 6041

EMAIL: unopal@singnet.com.sg
WEBSITE: www.unopal.com.sg

Magnetic Field Immune Metal Barrel-M12

General Data

- Metal housing
- Threaded barrel M12x1
- DC 3-wire
- Function display LED
- Degree of protection IP67
- Standard size
- Alternating magnetic field resistant ≤ 100mT
- Short circuit, overload, reverse polarity protection

Technical Data

Type	Rated operating distance S_n	Mounting	Output function	Output type	Voltage-range U_B	Rated current	Switching frequency	Ambient temperature	Connection	Mechanical Drawing
Fi2A-M12-OP6L	2mm	flush	NO	PNP	10…30VDC	≤200mA	3000Hz	-25…70°C	2m cable	1
Fi2A-M12-CP6L	2mm	flush	NC	PNP	10…30VDC	≤200mA	3000Hz	-25…70°C	2m cable	1
Fi2A-M12-ON6L	2mm	flush	NO	NPN	10…30VDC	≤200mA	3000Hz	-25…70°C	2m cable	1
Fi2A-M12-CN6L	2mm	flush	NC	NPN	10…30VDC	≤200mA	3000Hz	-25…70°C	2m cable	1

Connection Diagram

Bu = blue; Bn = brown; Bk = black; Wh = white; (1-4) = Connector pin M12

Cable

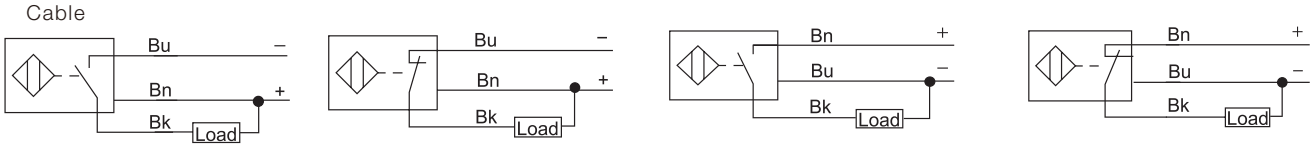

NPN NO NPN NC PNP NO PNP NC

Mechanical Drawing

Drawing 1

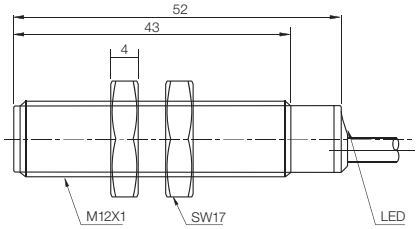

Approvals Certificates

CE

This edition replaces all previous issues. Availability, errors and specification subject to change without notice.

UNOPAL PRIVATE LIMITED
8, UBI ROAD 2, #06-20, ZERVEX
SINGAPORE 408538

TEL: +65-6747 0083
FAX: +65-6747 6041

EMAIL: unopal@singnet.com.sg
WEBSITE: www.unopal.com.sg

Magnetic Field Immune Metal Barrel-M18

General Data

- Metal housing
- Threaded barrel M18x1
- DC 3-wire
- Function display LED
- Degree of protection IP67
- Standard size
- Alternating magnetic field resistant ≤ 100mT
- Short circuit, overload, reverse polarity protection

Technical Data

Type	Rated operating distance S_n	Mounting	Output function	Output type	Voltage-range U_B	Rated current	Switching frequency	Ambient temperature	Connection	Mechanical Drawing
Fi5A-M18-OP6L	5mm	flush	NO	PNP	10…30VDC	≤200mA	1000Hz	-25…70°C	2m cable	1
Fi5A-M18-CP6L	5mm	flush	NC	PNP	10…30VDC	≤200mA	1000Hz	-25…70°C	2m cable	1
Fi5A-M18-ON6L	5mm	flush	NO	NPN	10…30VDC	≤200mA	1000Hz	-25…70°C	2m cable	1
Fi5A-M18-CN6L	5mm	flush	NC	NPN	10…30VDC	≤200mA	1000Hz	-25…70°C	2m cable	1

Connection Diagram

Bu = blue; Bn = brown; Bk = black; Wh = white; (1-4) = Connector pin M12

Cable

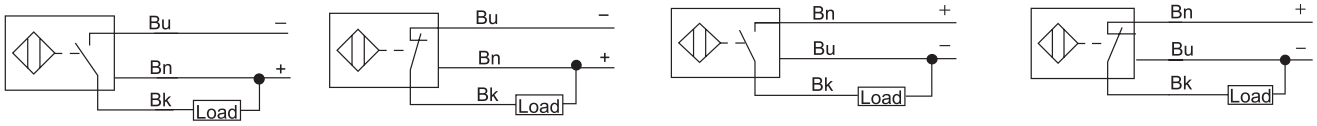

NPN NO NPN NC PNP NO PNP NC

Mechanical Drawing

Drawing 1

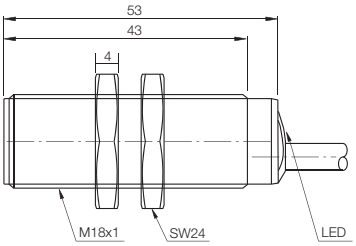

Approvals
Certificates

CE

This edition replaces all previous issues. Availability, errors and specification subject to change without notice.

UNOPAL PRIVATE LIMITED
8, UBI ROAD 2, #06-20, ZERVEX
SINGAPORE 408538

TEL: +65-6747 0083
FAX: +65-6747 6041

EMAIL: unopal@singnet.com.sg
WEBSITE: www.unopal.com.sg

Wide Temperature Range -M12

General Data

- Metal housing
- Threaded barrel
- DC 3-wire
- Degree of protection IP67
- Temperature range up to 100℃
- PNP/NPN output, various rectangular sizes available
- High cost performance

Technical Data

Type	Rated operating distance S_n	Mounting	Output type	Output function	Voltage-range U_B	Rated current	Switching frequency	Ambient temperature	Connection	Mechanical Drawing
Fi2H-M12-OP6L	2mm	flush	PNP	NO	10…30VDC	≤100mA	1500Hz	-30…100°C	2m cable	1
Fi2H-M12-ON6L	2mm	flush	NPN	NO	10…30VDC	≤100mA	1500Hz	-30…100°C	2m cable	1
Fi2H-M12-CP6L	2mm	flush	PNP	NC	10…30VDC	≤100mA	1500Hz	-30…100°C	2m cable	1
Fi2H-M12-CN6L	2mm	flush	NPN	NC	10…30VDC	≤100mA	1500Hz	-30…100°C	2m cable	1
Ni4H-M12-OP6L	4mm	non flush	PNP	NO	10…30VDC	≤100mA	1000Hz	-30…100°C	2m cable	2
Ni4H-M12-ON6L	4mm	non flush	NPN	NO	10…30VDC	≤100mA	1000Hz	-30…100°C	2m cable	2
Ni4H-M12-CP6L	4mm	non flush	PNP	NC	10…30VDC	≤100mA	1000Hz	-30…100°C	2m cable	2
Ni4H-M12-CN6L	4mm	non flush	NPN	NC	10…30VDC	≤100mA	1000Hz	-30…100°C	2m cable	2
Fi2H-M12-OP6L-Q12	2mm	flush	PNP	NO	10…30VDC	≤100mA	1500Hz	-30…100°C	M12 Connector	3
Fi2H-M12-ON6L-Q12	2mm	flush	NPN	NO	10…30VDC	≤100mA	1500Hz	-30…100°C	M12 Connector	3
Fi2H-M12-CP6L-Q12	2mm	flush	PNP	NC	10…30VDC	≤100mA	1500Hz	-30…100°C	M12 Connector	3
Fi2H-M12-CN6L-Q12	2mm	flush	NPN	NC	10…30VDC	≤100mA	1500Hz	-30…100°C	M12 Connector	3
Ni4H-M12-OP6L-Q12	4mm	non flush	PNP	NO	10…30VDC	≤100mA	1000Hz	-30…100°C	M12 Connector	4
Ni4H-M12-ON6L-Q12	4mm	non flush	NPN	NO	10…30VDC	≤100mA	1000Hz	-30…100°C	M12 Connector	4
Ni4H-M12-CP6L-Q12	4mm	non flush	PNP	NC	10…30VDC	≤100mA	1000Hz	-30…100°C	M12 Connector	4
Ni4H-M12-CN6L-Q12	4mm	non flush	NPN	NC	10…30VDC	≤100mA	1000Hz	-30…100°C	M12 Connector	4

Connection Diagram

Cable

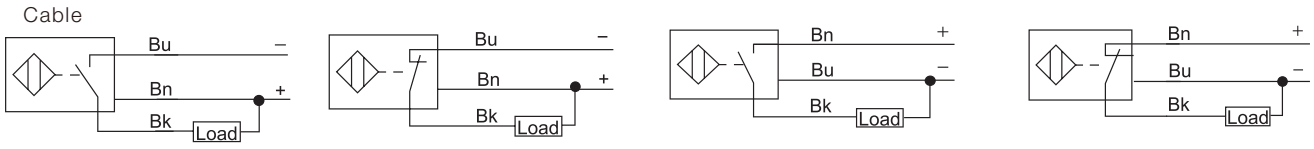

NPN NO NPN NC PNP NO PNP NC

Connector

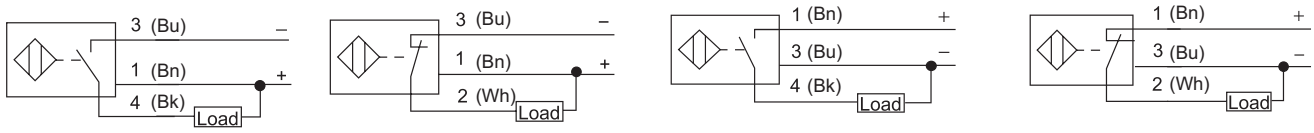

NPN NO NPN NC PNP NO PNP NC

Approvals Certificates

CE

This edition replaces all previous issues. Availability, errors and specification subject to change without notice.

UNOPAL PRIVATE LIMITED
8, UBI ROAD 2, #06-20, ZERVEX
SINGAPORE 408538

TEL: +65-6747 0083
FAX: +65-6747 6041

EMAIL: unopal@singnet.com.sg
WEBSITE: www.unopal.com.sg

Wide Temperature Range -M12

Mechanical Drawing

Drawing 1

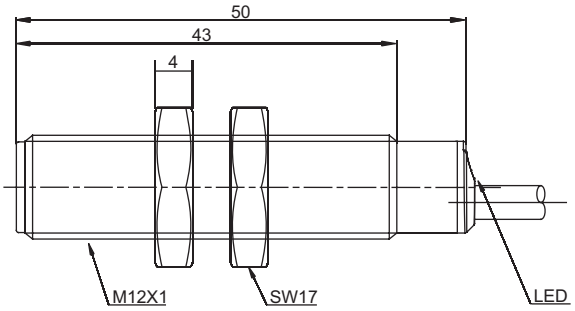

Drawing 2

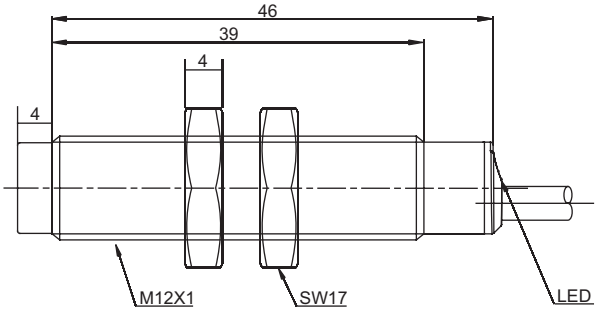

Drawing 3

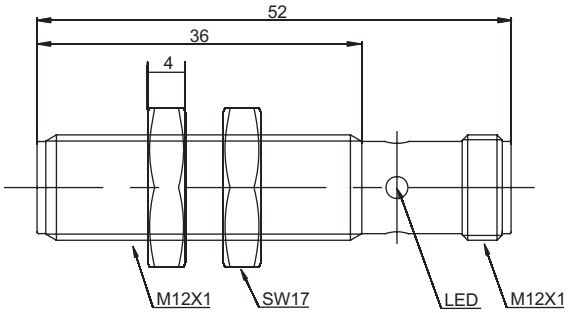

Drawing 4

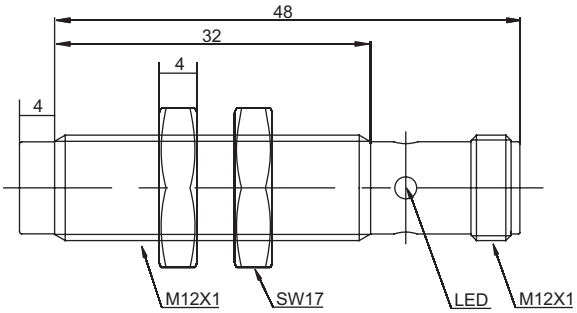

Approvals
Certificates

This edition replaces all previous issues. Availability, errors and specification subject to change without notice.

UNOPAL PRIVATE LIMITED
8, UBI ROAD 2, #06-20, ZERVEX
SINGAPORE 408538

TEL: +65-6747 0083
FAX: +65-6747 6041

EMAIL: unopal@singnet.com.sg
WEBSITE: www.unopal.com.sg

Wide Temperature Range -M18

General Data

- Metal housing
- Threaded barrel
- DC 3-wire
- Degree of protection IP67
- Temperature range up to 100℃
- PNP/NPN output, various rectangular sizes available
- High cost performance

Technical Data

Type	Rated operating distance S_n	Mounting	Output type	Output function	Voltage-range U_B	Rated current	Switching frequency	Ambient temperature	Connection	Mechanical Drawing
Fi5H-M18-OP6L	5mm	flush	PNP	NO	10…30VDC	≤100mA	1000Hz	-30…100°C	2m cable	1
Fi5H-M18-ON6L	5mm	flush	NPN	NO	10…30VDC	≤100mA	1000Hz	-30…100°C	2m cable	1
Fi5H-M18-CP6L	5mm	flush	PNP	NC	10…30VDC	≤100mA	1000Hz	-30…100°C	2m cable	1
Fi5H-M18-CN6L	5mm	flush	NPN	NC	10…30VDC	≤100mA	1000Hz	-30…100°C	2m cable	1
Ni8H-M18-OP6L	8mm	non flush	PNP	NO	10…30VDC	≤100mA	800Hz	-30…100°C	2m cable	2
Ni8H-M18-ON6L	8mm	non flush	NPN	NO	10…30VDC	≤100mA	800Hz	-30…100°C	2m cable	2
Ni8H-M18-CP6L	8mm	non flush	PNP	NC	10…30VDC	≤100mA	800Hz	-30…100°C	2m cable	2
Ni8H-M18-CN6L	8mm	non flush	NPN	NC	10…30VDC	≤100mA	800Hz	-30…100°C	2m cable	2
Fi5H-M18-OP6L-Q12	5mm	flush	PNP	NO	10…30VDC	≤100mA	1000Hz	-30…100°C	M12 Connector	3
Fi5H-M18-ON6L-Q12	5mm	flush	NPN	NO	10…30VDC	≤100mA	1000Hz	-30…100°C	M12 Connector	3
Fi5H-M18-CP6L-Q12	5mm	flush	PNP	NC	10…30VDC	≤100mA	1000Hz	-30…100°C	M12 Connector	3
Fi5H-M18-CN6L-Q12	5mm	flush	NPN	NC	10…30VDC	≤100mA	1000Hz	-30…100°C	M12 Connector	3
Ni8H-M18-OP6L-Q12	8mm	non flush	PNP	NO	10…30VDC	≤100mA	800Hz	-30…100°C	M12 Connector	4
Ni8H-M18-ON6L-Q12	8mm	non flush	NPN	NO	10…30VDC	≤100mA	800Hz	-30…100°C	M12 Connector	4
Ni8H-M18-CP6L-Q12	8mm	non flush	PNP	NC	10…30VDC	≤100mA	800Hz	-30…100°C	M12 Connector	4
Ni8H-M18-CN6L-Q12	8mm	non flush	NPN	NC	10…30VDC	≤100mA	800Hz	-30…100°C	M12 Connector	4

Connection Diagram

Cable

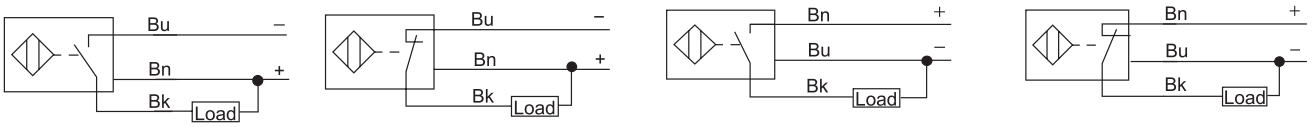

NPN NO NPN NC PNP NO PNP NC

Connector

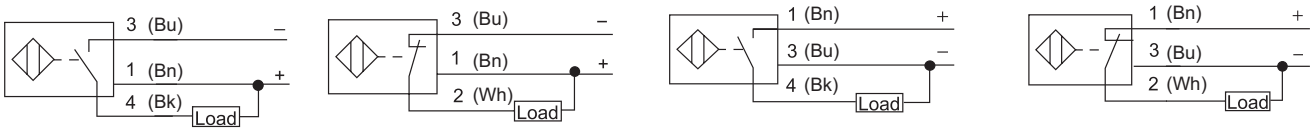

NPN NO NPN NC PNP NO PNP NC

Approvals Certificates

CE

This edition replaces all previous issues. Availability, errors and specification subject to change without notice.

UNOPAL PRIVATE LIMITED
8, UBI ROAD 2, #06-20, ZERVEX
SINGAPORE 408538

TEL: +65-6747 0083
FAX: +65-6747 6041

EMAIL: unopal@singnet.com.sg
WEBSITE: www.unopal.com.sg

Wide Temperature Range -M18

Mechanical Drawing

Drawing 1

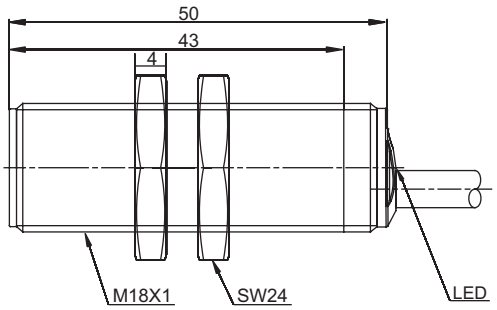

Drawing 2

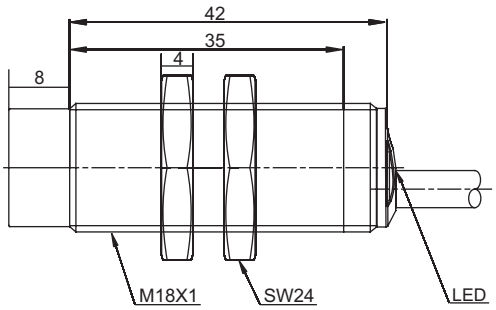

Drawing 3

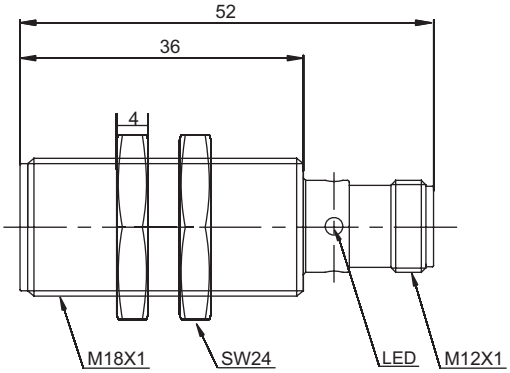

Drawing 4

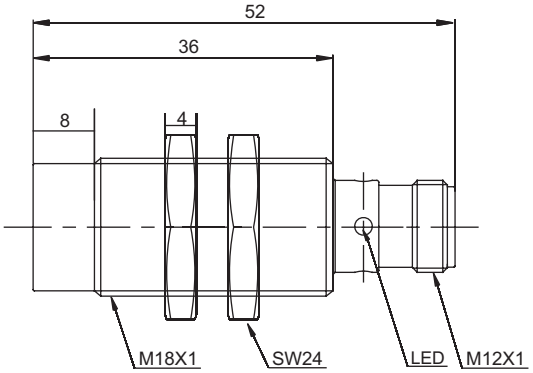

Approvals
Certificates

This edition replaces all previous issues. Availability, errors and specification subject to change without notice.

UNOPAL PRIVATE LIMITED
8, UBI ROAD 2, #06-20, ZERVEX
SINGAPORE 408538

TEL: +65-6747 0083
FAX: +65-6747 6041

EMAIL: unopal@singnet.com.sg
WEBSITE: www.unopal.com.sg

Wide Temperature Range -M30

General Data

- Metal housing
- Threaded barrel
- DC 3-wire
- Degree of protection IP67
- Temperature range up to 100℃
- PNP/NPN output, various rectangular sizes available
- High cost performance

Technical Data

Type	Rated operating distance S_n	Mounting	Output type	Output function	Voltage-range U_B	Rated current	Switching frequency	Ambient temperature	Connection	Mechanical Drawing
Fi10H-M30-OP6L	10mm	flush	PNP	NO	10…30VDC	≤100mA	500Hz	-30…100°C	2m cable	1
Fi10H-M30-ON6L	10mm	flush	NPN	NO	10…30VDC	≤100mA	500Hz	-30…100°C	2m cable	1
Fi10H-M18-CP6L	10mm	flush	PNP	NC	10…30VDC	≤100mA	500Hz	-30…100°C	2m cable	1
Fi10H-M18-CN6L	10mm	flush	NPN	NC	10…30VDC	≤100mA	500Hz	-30…100°C	2m cable	1
Ni15H-M18-OP6L	15mm	non flush	PNP	NO	10…30VDC	≤100mA	300Hz	-30…100°C	2m cable	2
Ni15H-M18-ON6L	15mm	non flush	NPN	NO	10…30VDC	≤100mA	300Hz	-30…100°C	2m cable	2
Ni15H-M18-CP6L	15mm	non flush	PNP	NC	10…30VDC	≤100mA	300Hz	-30…100°C	2m cable	2
Ni15H-M18-CN6L	15mm	non flush	NPN	NC	10…30VDC	≤100mA	300Hz	-30…100°C	2m cable	2
Fi10H-M30-OP6L-Q12	10mm	flush	PNP	NO	10…30VDC	≤100mA	500Hz	-30…100°C	M12 Connector	3
Fi10H-M30-ON6L-Q12	10mm	flush	NPN	NO	10…30VDC	≤100mA	500Hz	-30…100°C	M12 Connector	3
Fi10H-M30-CP6L-Q12	10mm	flush	PNP	NC	10…30VDC	≤100mA	500Hz	-30…100°C	M12 Connector	3
Fi10H-M30-CN6L-Q12	10mm	flush	NPN	NC	10…30VDC	≤100mA	500Hz	-30…100°C	M12 Connector	3
Ni15H-M30-OP6L-Q12	15mm	non flush	PNP	NO	10…30VDC	≤100mA	300Hz	-30…100°C	M12 Connector	4
Ni15H-M30-ON6L-Q12	15mm	non flush	NPN	NO	10…30VDC	≤100mA	300Hz	-30…100°C	M12 Connector	4
Ni15H-M30-CP6L-Q12	15mm	non flush	PNP	NC	10…30VDC	≤100mA	300Hz	-30…100°C	M12 Connector	4
Ni15H-M30-CN6L-Q12	15mm	non flush	NPN	NC	10…30VDC	≤100mA	300Hz	-30…100°C	M12 Connector	4

Connection Diagram

Cable

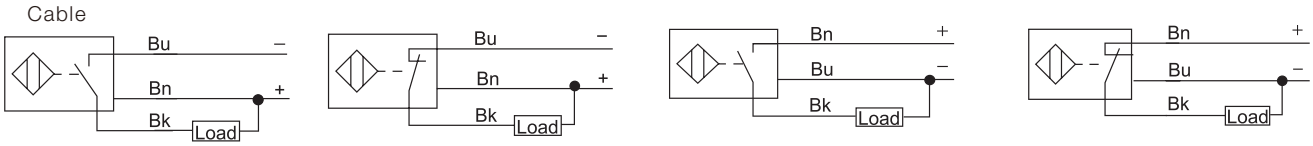

NPN NO NPN NC PNP NO PNP NC

Connector

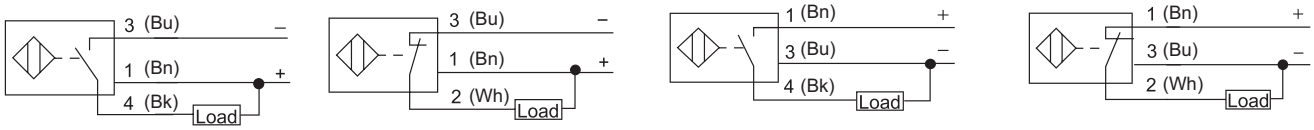

NPN NO NPN NC PNP NO PNP NC

Approvals Certificates

CE

This edition replaces all previous issues. Availability, errors and specification subject to change without notice.

UNOPAL PRIVATE LIMITED
8, UBI ROAD 2, #06-20, ZERVEX
SINGAPORE 408538

TEL: +65-6747 0083
FAX: +65-6747 6041

EMAIL: unopal@singnet.com.sg
WEBSITE: www.unopal.com.sg

Wide Temperature Range -M30

Mechanical Drawing

Drawing 1

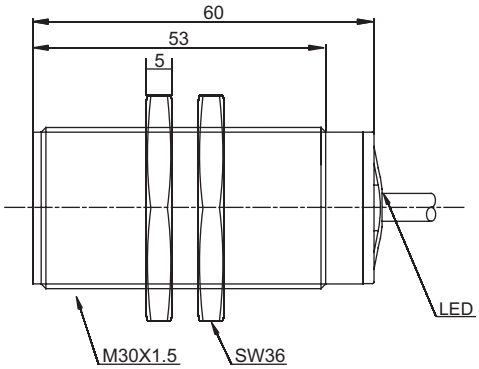

Drawing 2

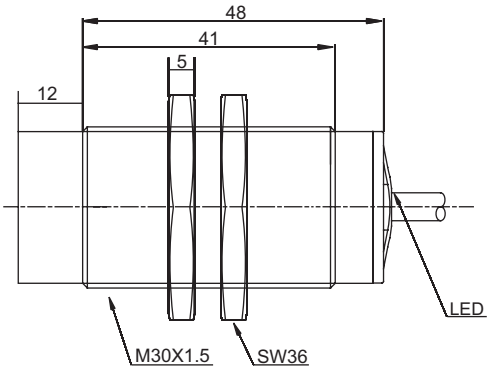

Drawing 3

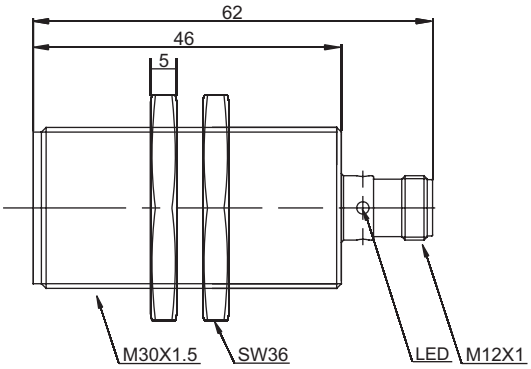

Drawing 4

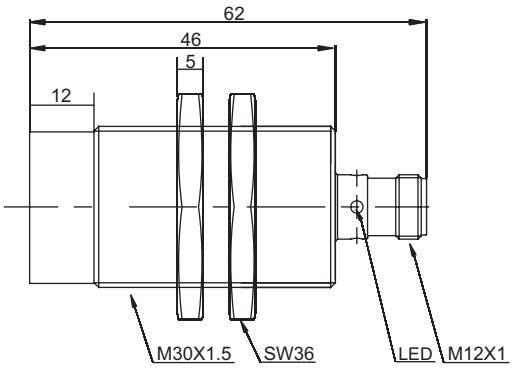

Approvals
Certificates

This edition replaces all previous issues. Availability, errors and specification subject to change without notice.

UNOPAL PRIVATE LIMITED
8, UBI ROAD 2, #06-20, ZERVEX
SINGAPORE 408538

TEL: +65-6747 0083
FAX: +65-6747 6041

EMAIL: unopal@singnet.com.sg
WEBSITE: www.unopal.com.sg

Temperature Extension-Low Temperature-M12

General Data

- Metal housing
- Threaded barrel
- DC 3-wire
- Function display LED
- Degree of protection IP67
- Standard size
- Flush/non flush mounting
- High switching frequency
- Temperature range up to -40°C

Technical Data

Type	Rated operating distance S_n	Mounting	Output type	Output function	Voltage-range U_B	Rated current	Switching frequency	Ambient temperature	Connection	Mechanical Drawing
Fi2-M12-OP6L/TB40	2mm	flush	PNP	NO	10…30VDC	≤200mA	1500Hz	-40…70°C	2m cable	1
Fi2-M12-ON6L/TB40	2mm	flush	NPN	NO	10…30VDC	≤200mA	1500Hz	-40…70°C	2m cable	1
Fi2-M12-CP6L/TB40	2mm	flush	PNP	NC	10…30VDC	≤200mA	1500Hz	-40…70°C	2m cable	1
Fi2-M12-CN6L/TB40	2mm	flush	NPN	NC	10…30VDC	≤200mA	1500Hz	-40…70°C	2m cable	1
Ni4-M12-OP6L/TB40	4mm	non flush	PNP	NO	10…30VDC	≤200mA	1000Hz	-40…70°C	2m cable	2
Ni4-M12-ON6L/TB40	4mm	non flush	NPN	NO	10…30VDC	≤200mA	1000Hz	-40…70°C	2m cable	2
Ni4-M12-CP6L/TB40	4mm	non flush	PNP	NC	10…30VDC	≤200mA	1000Hz	-40…70°C	2m cable	2
Ni4-M12-CN6L/TB40	4mm	non flush	NPN	NC	10…30VDC	≤200mA	1000Hz	-40…70°C	2m cable	2
Fi2-M12-OP6L-Q12/TB40	2mm	flush	PNP	NO	10…30VDC	≤200mA	1500Hz	-40…70°C	M12 Connector	3
Fi2-M12-ON6L-Q12/TB40	2mm	flush	NPN	NO	10…30VDC	≤200mA	1500Hz	-40…70°C	M12 Connector	3
Fi2-M12-CP6L-Q12/TB40	2mm	flush	PNP	NC	10…30VDC	≤200mA	1500Hz	-40…70°C	M12 Connector	3
Fi2-M12-CN6L-Q12/TB40	2mm	flush	NPN	NC	10…30VDC	≤200mA	1500Hz	-40…70°C	M12 Connector	3
Ni4-M12-OP6L-Q12/TB40	4mm	non flush	PNP	NO	10…30VDC	≤200mA	1000Hz	-40…70°C	M12 Connector	4
Ni4-M12-ON6L-Q12/TB40	4mm	non flush	NPN	NO	10…30VDC	≤200mA	1000Hz	-40…70°C	M12 Connector	4
Ni4-M12-CP6L-Q12/TB40	4mm	non flush	PNP	NC	10…30VDC	≤200mA	1000Hz	-40…70°C	M12 Connector	4
Ni4-M12-CN6L-Q12/TB40	4mm	non flush	NPN	NC	10…30VDC	≤200mA	1000Hz	-40…70°C	M12 Connector	4

Connection Diagram

Cable

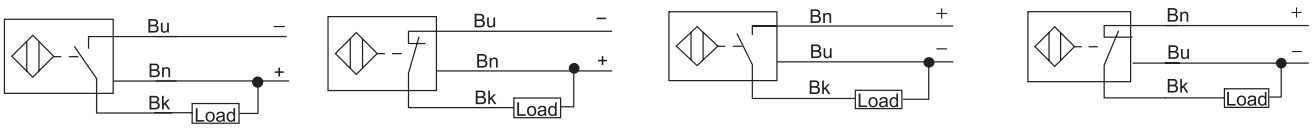

NPN NO NPN NC PNP NO PNP NC

Connector

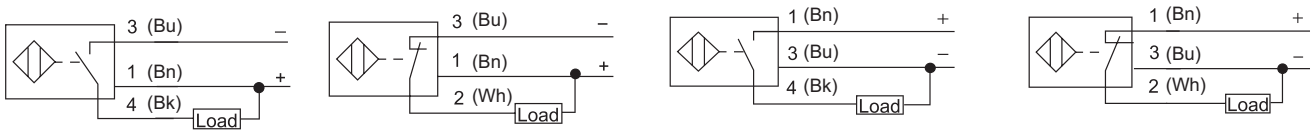

NPN NO NPN NC PNP NO PNP NC

Approvals Certificates

CE

This edition replaces all previous issues. Availability, errors and specification subject to change without notice.

UNOPAL PRIVATE LIMITED
8, UBI ROAD 2, #06-20, ZERVEX
SINGAPORE 408538

TEL: +65-6747 0083
FAX: +65-6747 6041

EMAIL: unopal@singnet.com.sg
WEBSITE: www.unopal.com.sg

Temperature Extension-Low Temperature-M12

Mechanical Drawing

Drawing 1

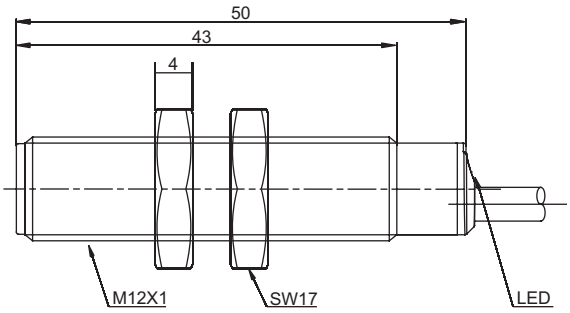

Drawing 2

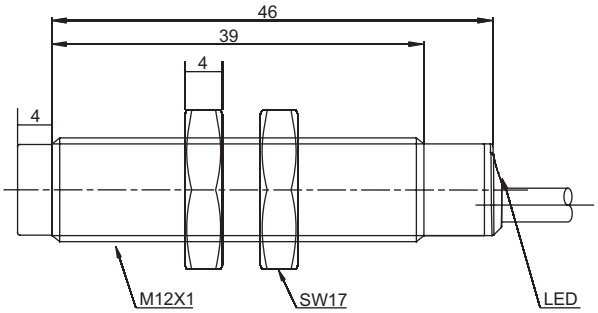

Drawing 3

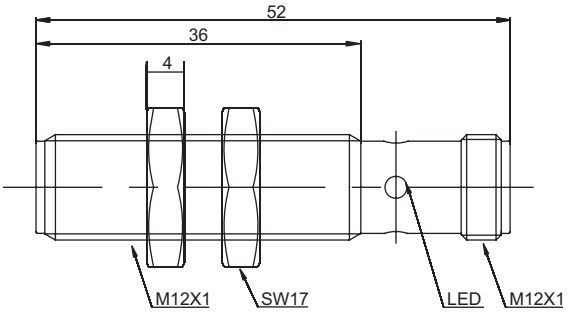

Drawing 4

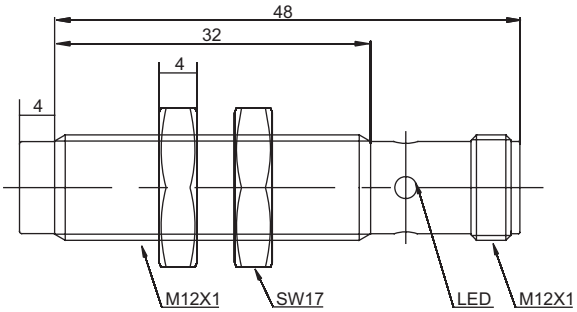

Approvals
Certificates

This edition replaces all previous issues. Availability, errors and specification subject to change without notice.

UNOPAL PRIVATE LIMITED
8, UBI ROAD 2, #06-20, ZERVEX
SINGAPORE 408538

TEL: +65-6747 0083
FAX: +65-6747 6041

EMAIL: unopal@singnet.com.sg
WEBSITE: www.unopal.com.sg

Temperature Extension-Low Temperature-M18

General Data

- Metal housing
- Threaded barrel
- DC 3-wire
- Degree of protection IP67
- Standard size
- Flush/non flush mounting
- Temperature range up to -40℃

Technical Data

Type	Rated operating distance S_n	Mounting	Output type	Output function	Voltage-range U_B	Rated current	Switching frequency	Ambient temperature	Connection	Mechanical Drawing
Fi5-M18-OP6L/TB40	5mm	flush	PNP	NO	10…30VDC	≤200mA	1000Hz	-40…70°C	2m cable	1
Fi5-M18-ON6L/TB40	5mm	flush	NPN	NO	10…30VDC	≤200mA	1000Hz	-40…70°C	2m cable	1
Fi5-M18-CP6L/TB40	5mm	flush	PNP	NC	10…30VDC	≤200mA	1000Hz	-40…70°C	2m cable	1
Fi5-M18-CN6L/TB40	5mm	flush	NPN	NC	10…30VDC	≤200mA	1000Hz	-40…70°C	2m cable	1
Ni8-M18-OP6L/TB40	8mm	non flush	PNP	NO	10…30VDC	≤200mA	800Hz	-40…70°C	2m cable	2
Ni8-M18-ON6L/TB40	8mm	non flush	NPN	NO	10…30VDC	≤200mA	800Hz	-40…70°C	2m cable	2
Ni8-M18-CP6L/TB40	8mm	non flush	PNP	NC	10…30VDC	≤200mA	800Hz	-40…70°C	2m cable	2
Ni8-M18-CN6L/TB40	8mm	non flush	NPN	NC	10…30VDC	≤200mA	800Hz	-40…70°C	2m cable	2
Fi5-M18-OP6L-Q12/TB40	5mm	flush	PNP	NO	10…30VDC	≤200mA	1000Hz	-40…70°C	M12 Connector	3
Fi5-M18-ON6L-Q12/TB40	5mm	flush	NPN	NO	10…30VDC	≤200mA	1000Hz	-40…70°C	M12 Connector	3
Fi5-M18-CP6L-Q12/TB40	5mm	flush	PNP	NC	10…30VDC	≤200mA	1000Hz	-40…70°C	M12 Connector	3
Fi5-M18-CN6L-Q12/TB40	5mm	flush	NPN	NC	10…30VDC	≤200mA	1000Hz	-40…70°C	M12 Connector	3
Ni8-M18-OP6L-Q12/TB40	8mm	non flush	PNP	NO	10…30VDC	≤200mA	800Hz	-40…70°C	M12 Connector	4
Ni8-M18-ON6L-Q12/TB40	8mm	non flush	NPN	NO	10…30VDC	≤200mA	800Hz	-40…70°C	M12 Connector	4
Ni8-M18-CP6L-Q12/TB40	8mm	non flush	PNP	NC	10…30VDC	≤200mA	800Hz	-40…70°C	M12 Connector	4
Ni8-M18-CN6L-Q12/TB40	8mm	non flush	NPN	NC	10…30VDC	≤200mA	800Hz	-40…70°C	M12 Connector	4

Connection Diagram

Cable

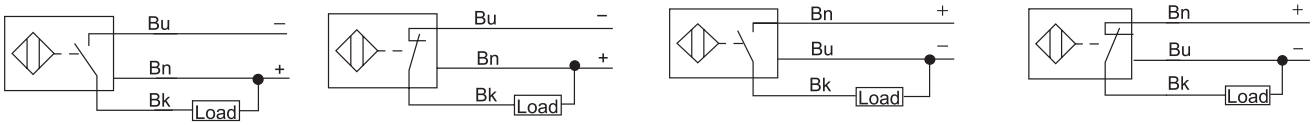

NPN NO NPN NC PNP NO PNP NC

Connector

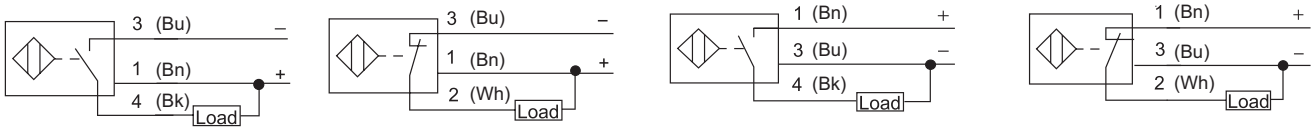

NPN NO NPN NC PNP NO PNP NC

Approvals Certificates

CE

This edition replaces all previous issues. Availability, errors and specification subject to change without notice.

UNOPAL PRIVATE LIMITED
8, UBI ROAD 2, #06-20, ZERVEX
SINGAPORE 408538

TEL: +65-6747 0083
FAX: +65-6747 6041

EMAIL: unopal@singnet.com.sg
WEBSITE: www.unopal.com.sg

Temperature Extension-Low Temperature-M18

Mechanical Drawing

Drawing 1

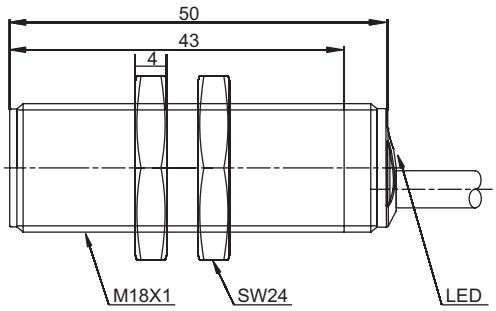

Drawing 2

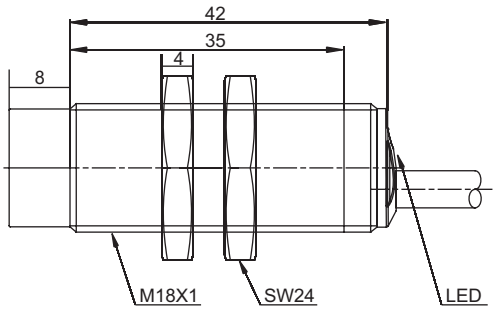

Drawing 3

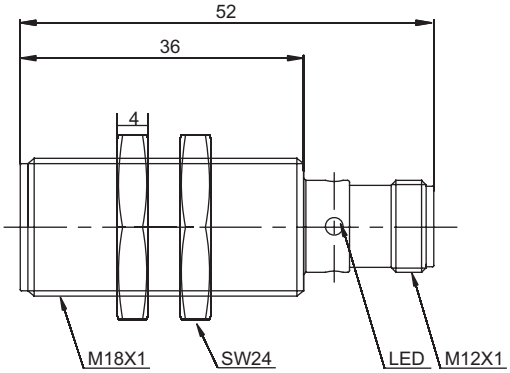

Drawing 4

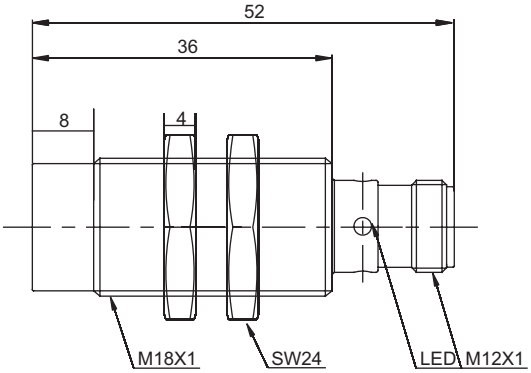

Approvals
Certificates

This edition replaces all previous issues. Availability, errors and specification subject to change without notice.

UNOPAL PRIVATE LIMITED
8, UBI ROAD 2, #06-20, ZERVEX
SINGAPORE 408538

TEL: +65-6747 0083
FAX: +65-6747 6041

EMAIL: unopal@singnet.com.sg
WEBSITE: www.unopal.com.sg

Temperature Extension-Low Temperature-M30

General Data

- Metal housing
- Threaded barrel
- DC 3-wire
- Degree of protection IP67
- Standard size
- Flush/non flush mounting
- Temperature range up to -40°C

Technical Data

Type	Rated operating distance S_n	Mounting	Output type	Output function	Voltage-range U_B	Rated current	Switching frequency	Ambient temperature	Connection	Mechanical Drawing
Fi10-M30-OP6L/TB40	10mm	flush	PNP	NO	10…30VDC	≤200mA	500Hz	-40…70°C	2m cable	1
Fi10-M30-ON6L/TB40	10mm	flush	NPN	NO	10…30VDC	≤200mA	500Hz	-40…70°C	2m cable	1
Fi10-M30-CP6L/TB40	10mm	flush	PNP	NC	10…30VDC	≤200mA	500Hz	-40…70°C	2m cable	1
Fi10-M30-CN6L/TB40	10mm	flush	NPN	NC	10…30VDC	≤200mA	500Hz	-40…70°C	2m cable	1
Ni15-M30-OP6L/TB40	15mm	non flush	PNP	NO	10…30VDC	≤200mA	300Hz	-40…70°C	2m cable	2
Ni15-M30-ON6L/TB40	15mm	non flush	NPN	NO	10…30VDC	≤200mA	300Hz	-40…70°C	2m cable	2
Ni15-M30-CP6L/TB40	15mm	non flush	PNP	NC	10…30VDC	≤200mA	300Hz	-40…70°C	2m cable	2
Ni15-M30-CN6L/TB40	15mm	non flush	NPN	NC	10…30VDC	≤200mA	300Hz	-40…70°C	2m cable	2
Fi10-M30-OP6L-Q12/TB40	10mm	flush	PNP	NO	10…30VDC	≤200mA	500Hz	-40…70°C	M12 Connector	3
Fi10-M30-ON6L-Q12/TB40	10mm	flush	NPN	NO	10…30VDC	≤200mA	500Hz	-40…70°C	M12 Connector	3
Fi10-M30-CP6L-Q12/TB40	10mm	flush	PNP	NC	10…30VDC	≤200mA	500Hz	-40…70°C	M12 Connector	3
Fi10-M30-CN6L-Q12/TB40	10mm	flush	NPN	NC	10…30VDC	≤200mA	500Hz	-40…70°C	M12 Connector	3
Ni15-M30-OP6L-Q12/TB40	15mm	non flush	PNP	NO	10…30VDC	≤200mA	300Hz	-40…70°C	M12 Connector	4
Ni15-M30-ON6L-Q12/TB40	15mm	non flush	NPN	NO	10…30VDC	≤200mA	300Hz	-40…70°C	M12 Connector	4
Ni15-M30-CP6L-Q12/TB40	15mm	non flush	PNP	NC	10…30VDC	≤200mA	300Hz	-40…70°C	M12 Connector	4
Ni15-M30-CN6L-Q12/TB40	15mm	non flush	NPN	NC	10…30VDC	≤200mA	300Hz	-40…70°C	M12 Connector	4

Connection Diagram

Cable

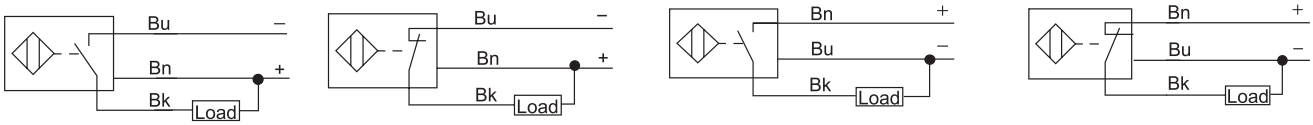

NPN NO NPN NC PNP NO PNP NC

Connector

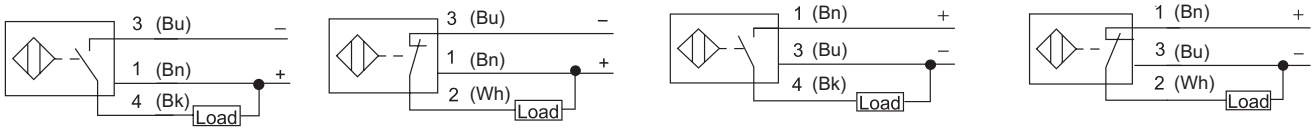

NPN NO NPN NC PNP NO PNP NC

Approvals Certificates

CE

This edition replaces all previous issues. Availability, errors and specification subject to change without notice.

UNOPAL PRIVATE LIMITED
8, UBI ROAD 2, #06-20, ZERVEX
SINGAPORE 408538

TEL: +65-6747 0083
FAX: +65-6747 6041

EMAIL: unopal@singnet.com.sg
WEBSITE: www.unopal.com.sg

Temperature Extension-Low Temperature-M30

Mechanical Drawing

Drawing 1

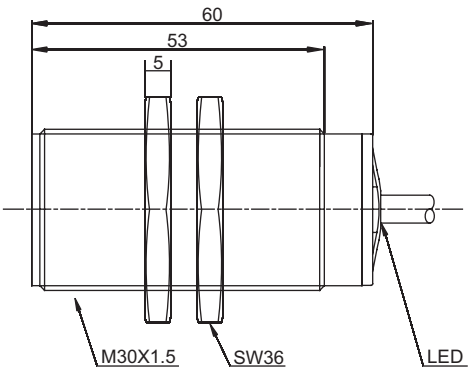

Drawing 2

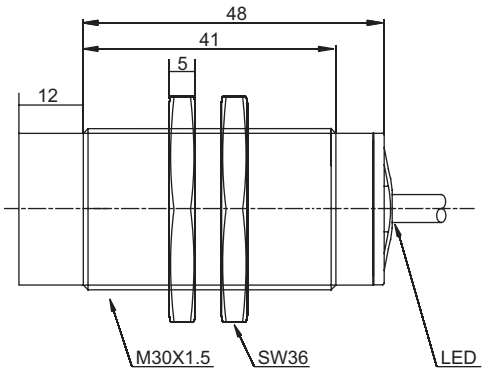

Drawing 3

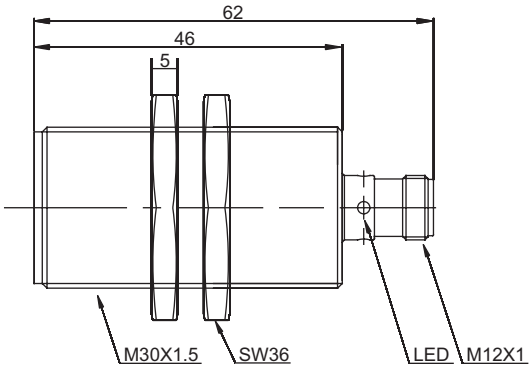

Drawing 4

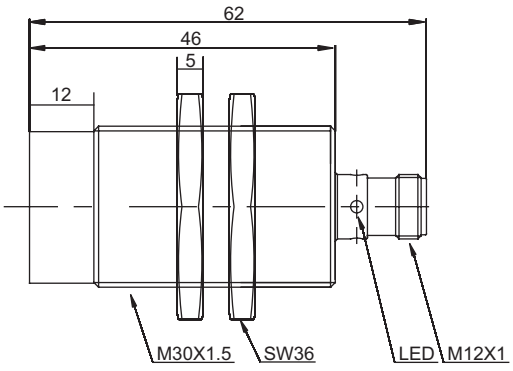

Approvals
Certificates

This edition replaces all previous issues. Availability, errors and specification subject to change without notice.

UNOPAL PRIVATE LIMITED
8, UBI ROAD 2, #06-20, ZERVEX
SINGAPORE 408538

TEL: +65-6747 0083
FAX: +65-6747 6041

EMAIL: unopal@singnet.com.sg
WEBSITE: www.unopal.com.sg

Temperature Extension-High Temperature

General Data

- Metal housing
- Threaded barrel
- DC 3-wire
- Temperature range up to 150℃
- Stainless steel

Technical Data

Type	Rated operating distance S_n	Mounting	Output function	Output type	Voltage-range U_B	Rated current	Switching frequency	Ambient temperature	Connection	Mechanical Drawing
Fi2-KG08-OP6/T150	2mm	flush	NO	PNP	10…30VDC	120mA(≤100℃) 80mA(>100℃)	600Hz	-25...140℃	2m cable	drawing 1
Fi3-KG12-OP6/T150	3mm	flush	NO	PNP	10...30VDC	120mA(≤100℃) 70mA(>100℃)	500Hz	-25...150℃	2m cable	drawing 2
Ni4-KG12-OP6/T150	4mm	non-flush	NO	PNP	10...30VDC	120mA(≤100℃) 70mA(>100℃)	500Hz	-25...150℃	2m cable	drawing 3
Fi2-KG08-ON6/T150	2mm	flush	NO	NPN	10…30VDC	120mA(≤100℃) 80mA(>100℃)	600Hz	-25...140℃	2m cable	drawing 1
Fi3-KG12-ON6/T150	3mm	flush	NO	NPN	10...30VDC	120mA(≤100℃) 70mA(>100℃)	500Hz	-25...150℃	2m cable	drawing 2
Ni4-KG12-ON6/T150	4mm	non-flush	NO	NPN	10...30VDC	120mA(≤100℃) 70mA(>100℃)	500Hz	-25...150℃	2m cable	drawing 3

Connection Diagram

Bu = blue; Bn = brown; Bk = black; Wh = white; (1-4) = Connector pin M12

Cable

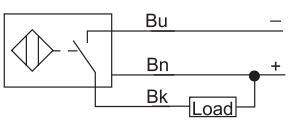

NPN NO

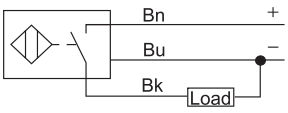

PNP NO

Approvals Certificates

CE

This edition replaces all previous issues. Availability, errors and specification subject to change without notice.

UNOPAL PRIVATE LIMITED
8, UBI ROAD 2, #06-20, ZERVEX
SINGAPORE 408538

TEL: +65-6747 0083
FAX: +65-6747 6041

EMAIL: unopal@singnet.com.sg
WEBSITE: www.unopal.com.sg

Temperature Extension-High Temperature

Mechanical Drawing

Drawing 1

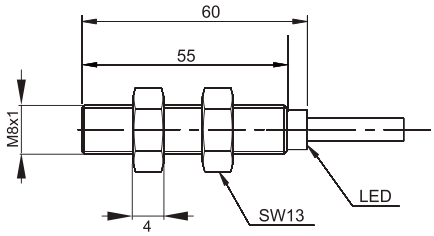

Drawing 2

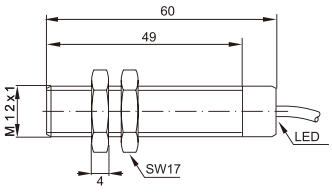

Drawing 3

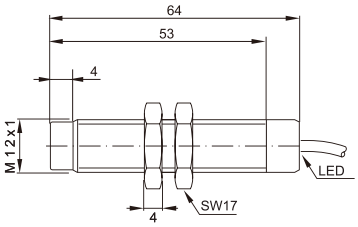

Approvals
Certificates

This edition replaces all previous issues. Availability, errors and specification subject to change without notice.

UNOPAL PRIVATE LIMITED
8, UBI ROAD 2, #06-20, ZERVEX
SINGAPORE 408538

TEL: +65-6747 0083
FAX: +65-6747 6041

EMAIL: unopal@singnet.com.sg
WEBSITE: www.unopal.com.sg

Teflon-Coated

General Data

- Metal housing
- Threaded barrel
- DC 3-wire
- Function display LED
- Degree of protection IP67
- Resistant against welding sparks
- Acid and alkali resistant
- Standard size

Technical Data

Type	Rated operating distance S_n	Mounting	Output function	Output type	Voltage-range U_B	Rated current	Switching frequency	Ambient temperature	Connection	Mechanical Drawing
Fi3-TM12-OP6L	3mm	flush	NO	PNP	10…30VDC	≤200mA	800Hz	-25…70°C	2m cable	1
Fi3-TM12-ON6L	3mm	flush	NO	NPN	10…30VDC	≤200mA	800Hz	-25…70°C	2m cable	1
Fi3-TM12-CP6L	3mm	flush	NC	PNP	10…30VDC	≤200mA	800Hz	-25…70°C	2m cable	1
Fi3-TM12-CN6L	3mm	flush	NC	NPN	10…30VDC	≤200mA	800Hz	-25…70°C	2m cable	1
Fi3-TM12-OP6L-Q12	3mm	flush	NO	PNP	10…30VDC	≤200mA	800Hz	-25…70°C	M12 connector	2
Fi3-TM12-ON6L-Q12	3mm	flush	NO	NPN	10…30VDC	≤200mA	800Hz	-25…70°C	M12 connector	2
Fi3-TM12-CP6L-Q12	3mm	flush	NC	PNP	10…30VDC	≤200mA	800Hz	-25…70°C	M12 connector	2
Fi3-TM12-CN6L-Q12	3mm	flush	NC	NPN	10…30VDC	≤200mA	800Hz	-25…70°C	M12 connector	2
Fi5-TM18-OP6L	5mm	flush	NO	PNP	10…30VDC	≤200mA	1000Hz	-25…70°C	2m cable	3
Fi5-TM18-ON6L	5mm	flush	NO	NPN	10…30VDC	≤200mA	1000Hz	-25…70°C	2m cable	3
Fi5-TM18-CP6L	5mm	flush	NC	PNP	10…30VDC	≤200mA	1000Hz	-25…70°C	2m cable	3
Fi5-TM18-CN6L	5mm	flush	NC	NPN	10…30VDC	≤200mA	1000Hz	-25…70°C	2m cable	3
Fi5-TM18-OP6L-Q12	5mm	flush	NO	PNP	10…30VDC	≤200mA	1000Hz	-25…70°C	M12 connector	4
Fi5-TM18-ON6L-Q12	5mm	flush	NO	NPN	10…30VDC	≤200mA	1000Hz	-25…70°C	M12 connector	4
Fi5-TM18-CP6L-Q12	5mm	flush	NC	PNP	10…30VDC	≤200mA	1000Hz	-25…70°C	M12 connector	4
Fi5-TM18-CN6L-Q12	5mm	flush	NC	NPN	10…30VDC	≤200mA	1000Hz	-25…70°C	M12 connector	4
Fi10-TM30-OP6L	10mm	flush	NO	PNP	10…30VDC	≤200mA	500Hz	-25…70°C	2m cable	5
Fi10-TM30-ON6L	10mm	flush	NO	NPN	10…30VDC	≤200mA	500Hz	-25…70°C	2m cable	5
Fi10-TM30-CP6L	10mm	flush	NC	PNP	10…30VDC	≤200mA	500Hz	-25…70°C	2m cable	5
Fi10-TM30-CN6L	10mm	flush	NC	NPN	10…30VDC	≤200mA	500Hz	-25…70°C	2m cable	5
Fi10-TM30-OP6L-Q12	10mm	flush	NO	PNP	10…30VDC	≤200mA	500Hz	-25…70°C	M12 connector	6
Fi10-TM30-ON6L-Q12	10mm	flush	NO	NPN	10…30VDC	≤200mA	500Hz	-25…70°C	M12 connector	6
Fi10-TM30-CP6L-Q12	10mm	flush	NC	PNP	10…30VDC	≤200mA	500Hz	-25…70°C	M12 connector	6
Fi10-TM30-CN6L-Q12	10mm	flush	NC	NPN	10…30VDC	≤200mA	500Hz	-25…70°C	M12 connector	6

Connection Diagram

Bu = blue; Bn = brown; Bk = black; Wh = white; (1-4) = Connector pin M12

Cable

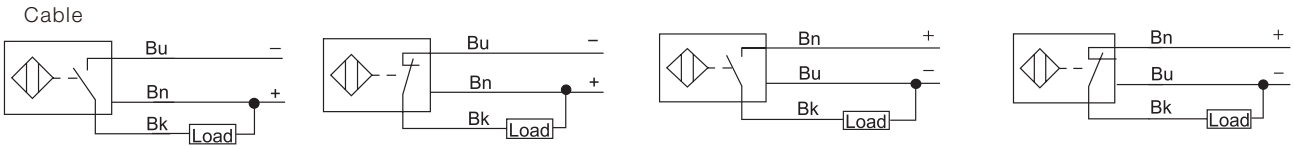

NPN NO | NPN NC | PNP NO | PNP NC

Approvals Certificates

CE

This edition replaces all previous issues. Availability, errors and specification subject to change without notice.

UNOPAL PRIVATE LIMITED
8, UBI ROAD 2, #06-20, ZERVEX
SINGAPORE 408538

TEL: +65-6747 0083
FAX: +65-6747 6041

EMAIL: unopal@singnet.com.sg
WEBSITE: www.unopal.com.sg

Teflon-Coated

Connector

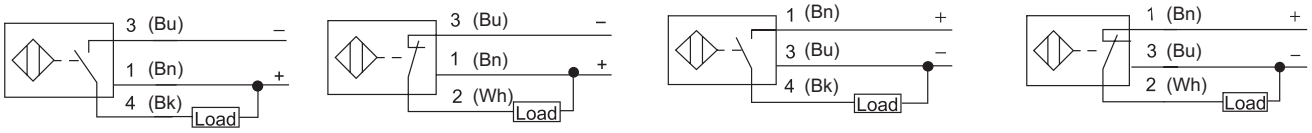

NPN NO | NPN NC | PNP NO | PNP NC

Mechanical Drawing

Drawing 1

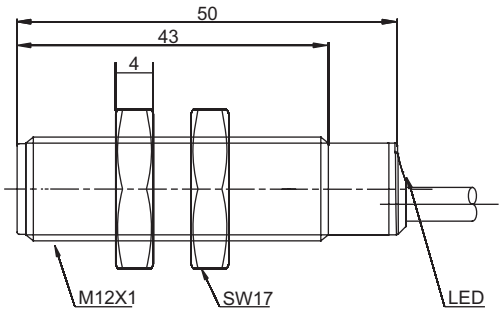

Drawing 2

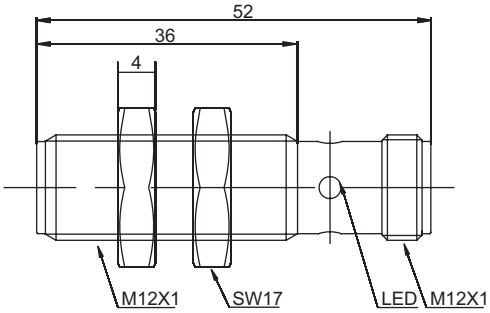

Drawing 3

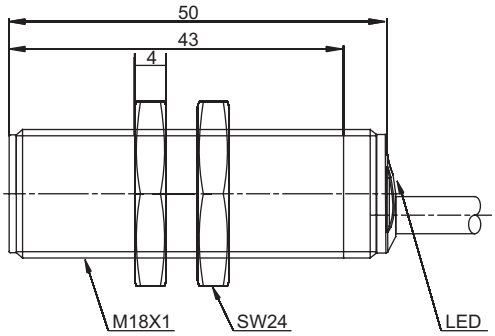

Drawing 4

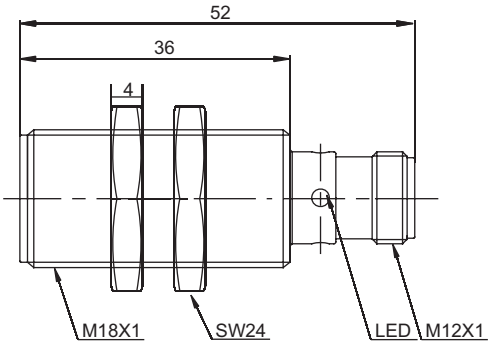

Drawing 5

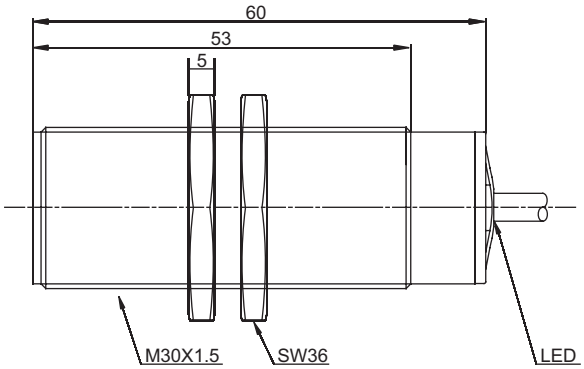

Drawing 6

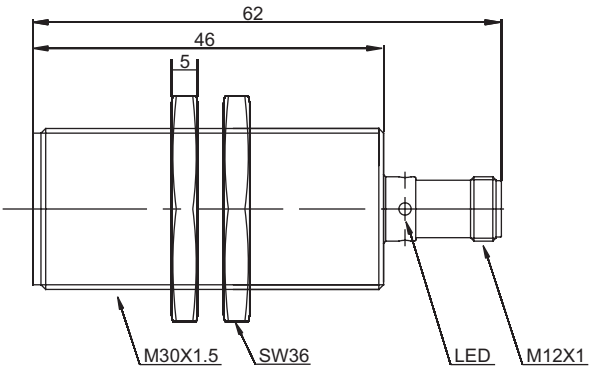

Approvals
Certificates

CE

This edition replaces all previous issues. Availability, errors and specification subject to change without notice.

UNOPAL PRIVATE LIMITED
8, UBI ROAD 2, #06-20, ZERVEX
SINGAPORE 408538

TEL: +65-6747 0083
FAX: +65-6747 6041

EMAIL: unopal@singnet.com.sg
WEBSITE: www.unopal.com.sg

Analogue Output Metal Barrel-M12

General Data

- Metal housing
- Threaded barrel M12x1
- Current or voltage output or both
- Function display LED
- Degree of protection IP67
- Flush/non flush mounting
- Current output 4-20mA, on request

Technical Data

Type	Rated operating distance S_n	Mounting	Output function	Output type	Voltage-range U_B	Output	Linearity	Ambient temperature	Connection	Mechanical Drawing
Fi2-M12-LU	0,4-2mm	flush	Analogue	Voltage	15…30VDC	0…10VDC	≤3%	-25…70°C	2m cable	1
Fi2-M12-LI	0,4-2mm	flush	Analogue	Current	15…30VDC	0…20mA	≤3%	-25…70°C	2m cable	1
Fi2-M12-LIU	0,4-2mm	flush	Analogue	Voltage Current	15…30VDC	0…10VDC 0…20mA	≤3%	-25…70°C	2m cable	1
Ni4-M12-LU	0,8-4mm	non flush	Analogue	Voltage	15…30VDC	0…10VDC	≤3%	-25…70°C	2m cable	2
Ni4-M12-LI	0,8-4mm	non flush	Analogue	Current	15…30VDC	0…20mA	≤3%	-25…70°C	2m cable	2
Ni4-M12-LIU	0,8-4mm	non flush	Analogue	Voltage Current	15…30VDC	0…10VDC 0…20mA	≤3%	-25…70°C	2m cable	2
Fi2-M12-LU-Q12	0,4-2mm	flush	Analogue	Voltage	15…30VDC	0…10VDC	≤3%	-25…70°C	M12 connector	3
Fi2-M12-LI-Q12	0,4-2mm	flush	Analogue	Current	15…30VDC	0…20mA	≤3%	-25…70°C	M12 connector	3
Fi2-M12-LIU-Q12	0,4-2mm	flush	Analogue	Voltage Current	15…30VDC	0…10VDC 0…20mA	≤3%	-25…70°C	M12 connector	3
Ni4-M12-LU-Q12	0,8-4mm	non flush	Analogue	Voltage	15…30VDC	0…10VDC	≤3%	-25…70°C	M12 connector	4
Ni4-M12-LI-Q12	0,8-4mm	non flush	Analogue	Current	15…30VDC	0…20mA	≤3%	-25…70°C	M12 connector	4
Ni4-M12-LIU-Q12	0,8-4mm	non flush	Analogue	Voltage Current	15…30VDC	0…10VDC 0…20mA	≤3%	-25…70°C	M12 connector	4

Connection Diagram

Bu = blue; Bn = brown; Bk = black; Wh = white; (1-4) = Connector pin M12

Cable

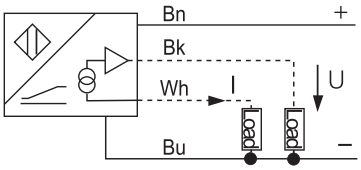

Connector

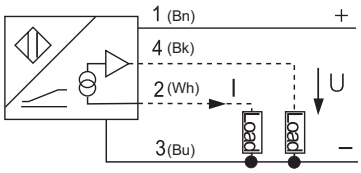

Approvals Certificates

CE

This edition replaces all previous issues. Availability, errors and specification subject to change without notice.

UNOPAL PRIVATE LIMITED
8, UBI ROAD 2, #06-20, ZERVEX
SINGAPORE 408538

TEL: +65-6747 0083
FAX: +65-6747 6041

EMAIL: unopal@singnet.com.sg
WEBSITE: www.unopal.com.sg

Analogue Output Metal Barrel-M12

Mechanical Drawing

Drawing 1

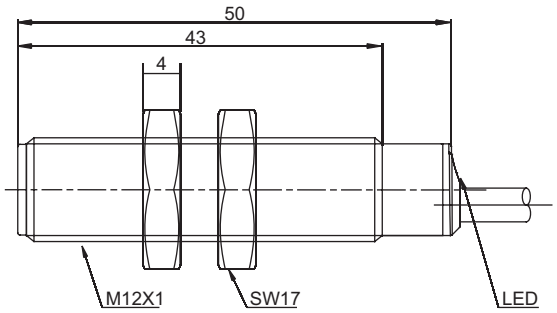

Drawing 2

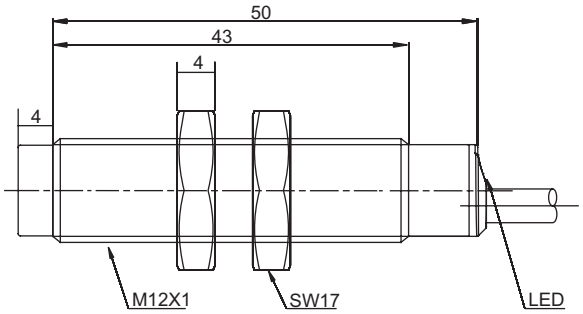

Drawing 3

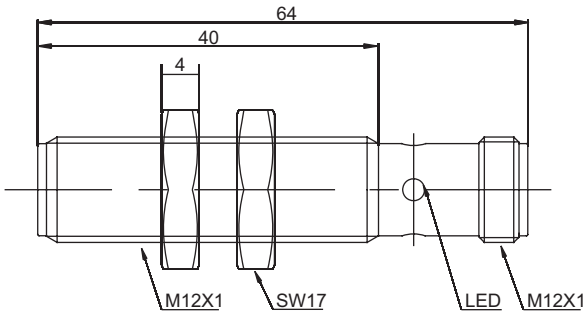

Drawing 4

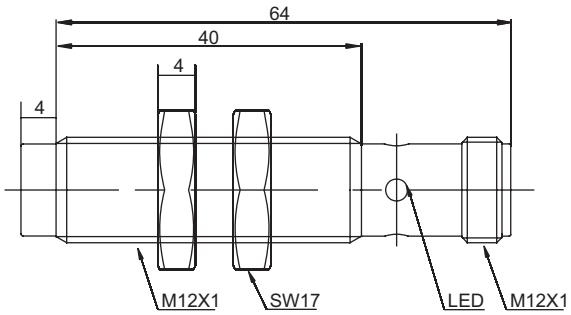

Approvals
Certificates

This edition replaces all previous issues. Availability, errors and specification subject to change without notice.

UNOPAL PRIVATE LIMITED
8, UBI ROAD 2, #06-20, ZERVEX
SINGAPORE 408538

TEL: +65-6747 0083
FAX: +65-6747 6041

EMAIL: unopal@singnet.com.sg
WEBSITE: www.unopal.com.sg

Analogue Output Metal Barrel-M18

General Data

- Metal housing
- Threaded barrel M18x1
- Current or voltage output or both
- Function display LED
- Degree of protection IP67
- Flush/non flush mounting
- Current output 4-20mA, on request

Technical Data

Type	Rated operating distance S_n	Mounting	Output function	Output type	Voltage-range U_B	Output	Linearity	Ambient temperature	Connection	Mechanical Drawing
Fi5-M18-LU	1-5mm	flush	Analogue	Voltage	15…30VDC	0…10VDC	≤3%	-25…70°C	2m cable	1
Fi5-M18-LI	1-5mm	flush	Analogue	Current	15…30VDC	0…20mA	≤3%	-25…70°C	2m cable	1
Fi5-M18-LIU	1-5mm	flush	Analogue	Voltage Current	15…30VDC	0…10VDC 0…20mA	≤3%	-25…70°C	2m cable	1
Ni8-M18-LU	1,6-8mm	non flush	Analogue	Voltage	15…30VDC	0…10VDC	≤3%	-25…70°C	2m cable	2
Ni8-M18-LI	1,6-8mm	non flush	Analogue	Current	15…30VDC	0…20mA	≤3%	-25…70°C	2m cable	2
Ni8-M18-LIU	1,6-8mm	non flush	Analogue	Voltage Current	15…30VDC	0…10VDC 0…20mA	≤3%	-25…70°C	2m cable	2
Fi5-M18-LU-Q12	1-5mm	flush	Analogue	Voltage	15…30VDC	0…10VDC	≤3%	-25…70°C	M12 connector	3
Fi5-M18-LI-Q12	1-5mm	flush	Analogue	Current	15…30VDC	0…20mA	≤3%	-25…70°C	M12 connector	3
Fi5-M18-LIU-Q12	1-5mm	flush	Analogue	Voltage Current	15…30VDC	0…10VDC 0…20mA	≤3%	-25…70°C	M12 connector	3
Ni8-M18-LU-Q12	1,6-8mm	non flush	Analogue	Voltage	15…30VDC	0…10VDC	≤3%	-25…70°C	M12 connector	4
Ni8-M18-LI-Q12	1,6-8mm	non flush	Analogue	Current	15…30VDC	0…20mA	≤3%	-25…70°C	M12 connector	4
Ni8-M18-LIU-Q12	1,6-8mm	non flush	Analogue	Voltage Current	15…30VDC	0…10VDC 0…20mA	≤3%	-25…70°C	M12 connector	4

Connection Diagram

Bu = blue; Bn = brown; Bk = black; Wh = white; (1-4) = Connector pin M12

Cable

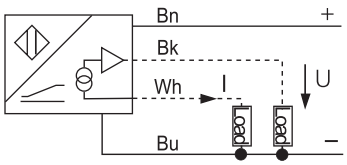

Connector

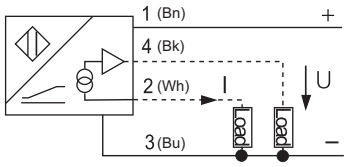

Approvals Certificates

CE

This edition replaces all previous issues. Availability, errors and specification subject to change without notice.

UNOPAL PRIVATE LIMITED
8, UBI ROAD 2, #06-20, ZERVEX
SINGAPORE 408538

TEL: +65-6747 0083
FAX: +65-6747 6041

EMAIL: unopal@singnet.com.sg
WEBSITE: www.unopal.com.sg

Analogue Output Metal Barrel-M18

Mechanical Drawing

Drawing 1

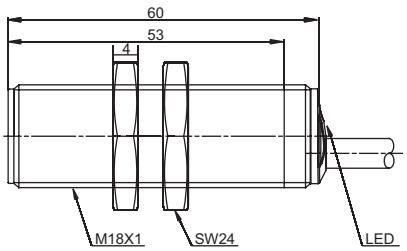

Drawing 2

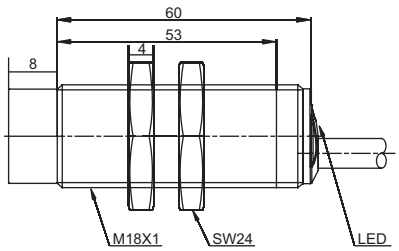

Drawing 3

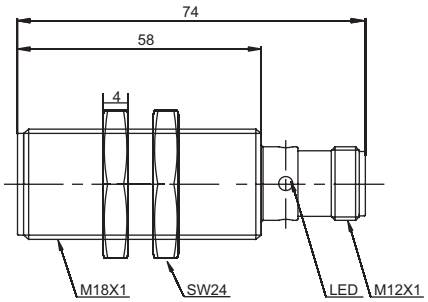

Drawing 4

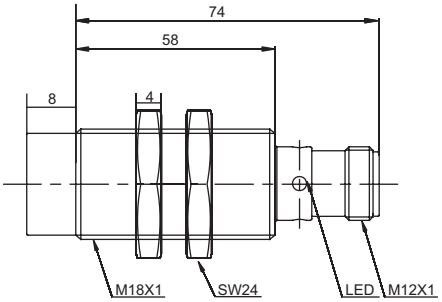

Approvals
Certificates

This edition replaces all previous issues. Availability, errors and specification subject to change without notice.

UNOPAL PRIVATE LIMITED
8, UBI ROAD 2, #06-20, ZERVEX
SINGAPORE 408538

TEL: +65-6747 0083
FAX: +65-6747 6041

EMAIL: unopal@singnet.com.sg
WEBSITE: www.unopal.com.sg

Analogue Output Metal Barrel-M30

General Data

- Metal housing
- Threaded barrel M30x1,5
- Current or voltage output or both
- Function display LED
- Degree of protection IP67
- Flush/non flush mounting
- Current output 4-20mA, on request

Technical Data

Type	Rated operating distance S_n	Mounting	Output function	Output type	Voltage-range U_B	Output	Linearity	Ambient temperature	Connection	Mechanical Drawing
Fi10-M30-LU	2-10mm	flush	Analogue	Voltage	15…30VDC	0…10VDC	≤3%	-25…70°C	2m cable	1
Fi10-M30-LI	2-10mm	flush	Analogue	Current	15…30VDC	0…20mA	≤3%	-25…70°C	2m cable	1
Fi10-M30-LIU	2-10mm	flush	Analogue	Voltage Current	15…30VDC	0…10VDC 0…20mA	≤3%	-25…70°C	2m cable	1
Ni15-M30-LU	3-15mm	non flush	Analogue	Voltage	15…30VDC	0…10VDC	≤3%	-25…70°C	2m cable	2
Ni15-M30-LI	3-15mm	non flush	Analogue	Current	15…30VDC	0…20mA	≤3%	-25…70°C	2m cable	2
Ni15-M30-LIU	3-15mm	non flush	Analogue	Voltage Current	15…30VDC	0…10VDC 0…20mA	≤3%	-25…70°C	2m cable	2
Fi10-M30-LU-Q12	2-10mm	flush	Analogue	Voltage	15…30VDC	0…10VDC	≤3%	-25…70°C	M12 connector	3
Fi10-M30-LI-Q12	2-10mm	flush	Analogue	Current	15…30VDC	0…20mA	≤3%	-25…70°C	M12 connector	3
Fi10-M30-LIU-Q12	2-10mm	flush	Analogue	Voltage Current	15…30VDC	0…10VDC 0…20mA	≤3%	-25…70°C	M12 connector	3
Ni15-M30-LU-Q12	3-15mm	non flush	Analogue	Voltage	15…30VDC	0…10VDC	≤3%	-25…70°C	M12 connector	4
Ni15-M30-LI-Q12	3-15mm	non flush	Analogue	Current	15…30VDC	0…20mA	≤3%	-25…70°C	M12 connector	4
Ni15-M30-LIU-Q12	3-15mm	non flush	Analogue	Voltage Current	15…30VDC	0…10VDC 0…20mA	≤3%	-25…70°C	M12 connector	4

Connection Diagram

Bu = blue; Bn = brown; Bk = black; Wh = white; (1-4) = Connector pin M12

Cable

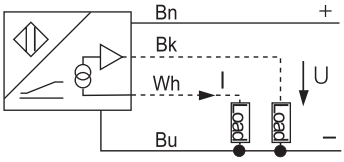

Connector

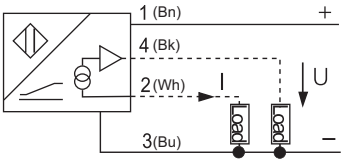

Approvals Certificates

CE

This edition replaces all previous issues. Availability, errors and specification subject to change without notice.

UNOPAL PRIVATE LIMITED
8, UBI ROAD 2, #06-20, ZERVEX
SINGAPORE 408538

TEL: +65-6747 0083
FAX: +65-6747 6041

EMAIL: unopal@singnet.com.sg
WEBSITE: www.unopal.com.sg

Analogue Output Metal Barrel-M30

Mechanical Drawing

Drawing 1

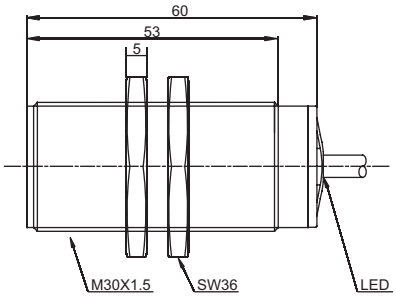

Drawing 2

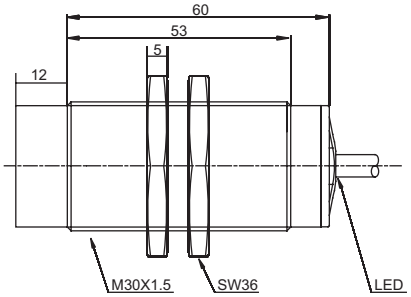

Drawing 3

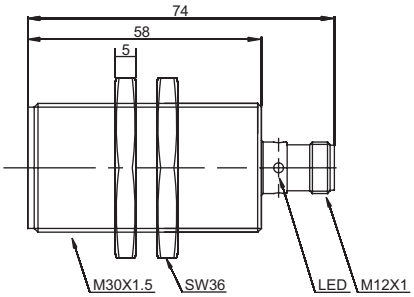

Drawing 4

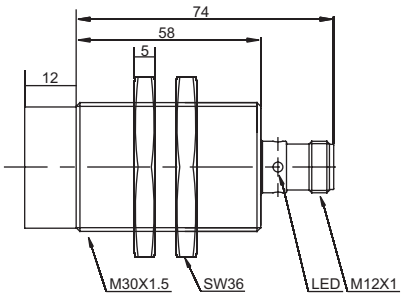

Approvals
Certificates

This edition replaces all previous issues. Availability, errors and specification subject to change without notice.

UNOPAL PRIVATE LIMITED
8, UBI ROAD 2, #06-20, ZERVEX
SINGAPORE 408538

TEL: +65-6747 0083
FAX: +65-6747 6041

EMAIL: unopal@singnet.com.sg
WEBSITE: www.unopal.com.sg

Analogue Output -W40

General Data

- Rectangular 40x40mm
- Current or voltage output or both
- Function display LED
- Degree of protection IP67
- Flush/non flush mounting
- Current output 4-20mA, on request

Technical Data

Type	Rated operating distance S_n	Mounting	Output function	Output type	Voltage-range U_B	Output	Linearity	Ambient temperature	Connection	Mechanical Drawing
Ni25-W40-LIU-Q12	2-25mm	non flush	Analogue	Voltage Current	15…30VDC	0…10VDC 0…20mA	≤3%	-25…70°C	M12 connector	1

Connection Diagram

Bu = blue; Bn = brown; Bk = black; Wh = white; (1-4) = Connector pin M12

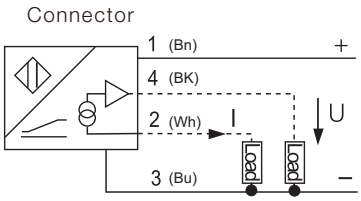

Mechanical Drawing

Drawing 1

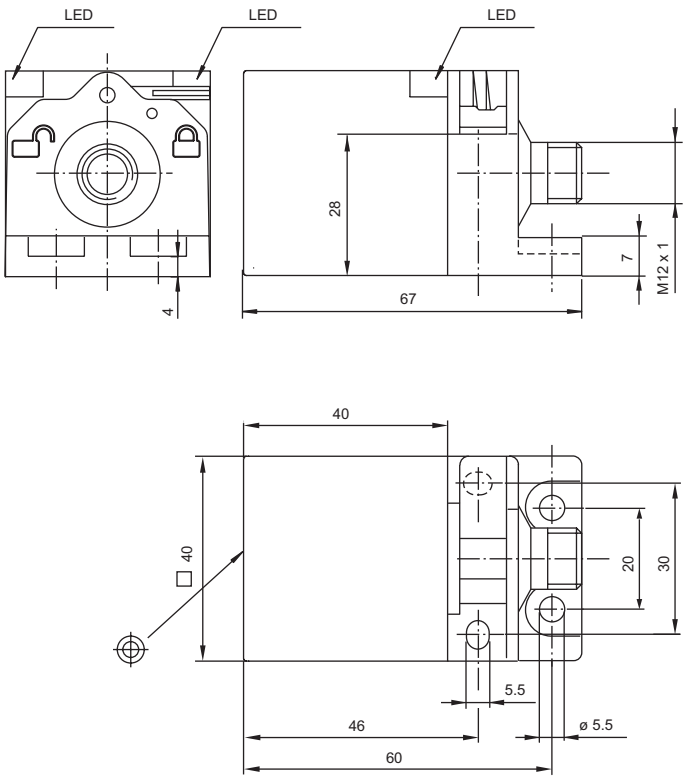

Approvals Certificates

CE

This edition replaces all previous issues. Availability, errors and specification subject to change without notice.

UNOPAL PRIVATE LIMITED
8, UBI ROAD 2, #06-20, ZERVEX
SINGAPORE 408538

TEL: +65-6747 0083
FAX: +65-6747 6041

EMAIL: unopal@singnet.com.sg
WEBSITE: www.unopal.com.sg

RPM Monitor Metal Barrel-M18

General Data

- Metal housing
- Threaded barrel M18x1
- DC 3-wire
- Function display LED
- Degree of protection IP67
- Inhibition at start: 9s
- Sensitivity adjustment by potentiometer
- Output NC to ensure safety (fail-safe)

Technical Data

Type	Rated operating distance S_n	Mounting	Output function	Output type	Voltage-range U_B	Rated current	Range of speed adjustment	Ambient temperature	Connection	Mechanical Drawing
Fi5R-M18-CP6L	5mm	flush	NC	PNP	10…30VDC	≤200mA	3…3000RPM	-25…70°C	2m cable	1
Fi5R-M18-CN6L	5mm	flush	NC	NPN	10…30VDC	≤200mA	3…3000RPM	-25…70°C	2m cable	1
Ni8R-M18-CP6L	8mm	non flush	NC	PNP	10…30VDC	≤200mA	3…3000RPM	-25…70°C	2m cable	2
Ni8R-M18-CN6L	8mm	non flush	NC	NPN	10…30VDC	≤200mA	3…3000RPM	-25…70°C	2m cable	2

Connection Diagram

Bu = blue; Bn = brown; Bk = black; Wh = white; (1-4) = Connector pin M12

Cable

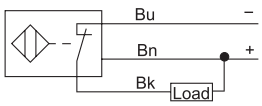

NPN NC

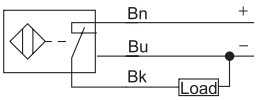

PNP NC

Mechanical Drawing

Drawing 1

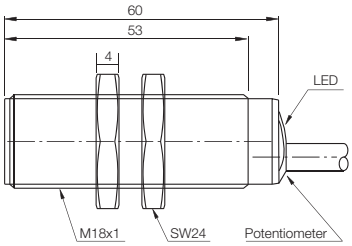

Drawing 2

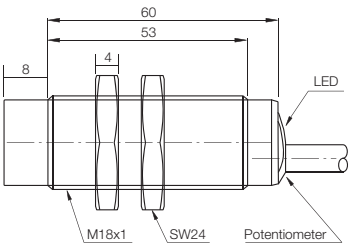

Switch Setting:

a. Power on, switch output NC, switch output NO after 10s

b. Speed is set at 100r, switch output NC when motor speed is higher thar 100r

c. Switch output NO when motor speed is lower thar 100r

When motor speed higher than the set, switch output NC, lower than the set, switch output NO.

Approvals Certificates

CE

This edition replaces all previous issues. Availability, errors and specification subject to change without notice.

UNOPAL PRIVATE LIMITED
8, UBI ROAD 2, #06-20, ZERVEX
SINGAPORE 408538

TEL: +65-6747 0083
FAX: +65-6747 6041

EMAIL: unopal@singnet.com.sg
WEBSITE: www.unopal.com.sg

RPM Monitor Metal Barrel-M30

General Data

- Metal housing
- Threaded barrel M30x1,5
- DC 3-wire
- Function display LED
- Degree of protection IP67
- Inhibition at start: 9s
- Sensitivity adjustment by potentiometer
- Output NC to ensure safety (fail-safe)

Technical Data

Type	Rated operating distance S_n	Mounting	Output function	Output type	Voltage-range U_B	Rated current	Range of speed adjustment	Ambient temperature	Connection	Mechanical Drawing
Fi10R-M30-CP6L	10mm	flush	NC	PNP	10…30VDC	≤200mA	3…3000RPM	-25…70°C	2m cable	1
Fi10R-M30-CN6L	10mm	flush	NC	NPN	10…30VDC	≤200mA	3…3000RPM	-25…70°C	2m cable	1
Ni15R-M30-CP6L	15mm	non flush	NC	PNP	10…30VDC	≤200mA	3…3000RPM	-25…70°C	2m cable	2
Ni15R-M30-CN6L	15mm	non flush	NC	NPN	10…30VDC	≤200mA	3…3000RPM	-25…70°C	2m cable	2

Connection Diagram

Bu = blue; Bn = brown; Bk = black; Wh = white; (1-4) = Connector pin M12

Cable

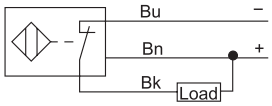

NPN NC

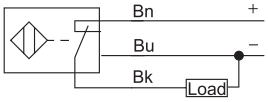

PNP NC

Mechanical Drawing

Drawing 1

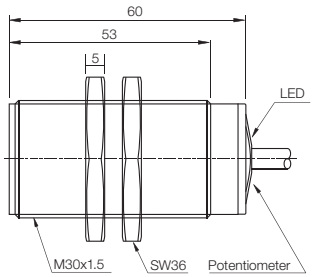

Drawing 2

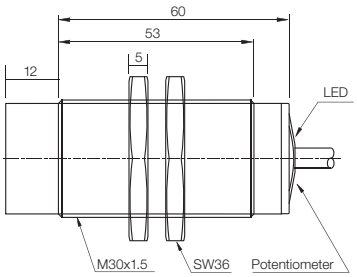

Approvals Certificates

CE

This edition replaces all previous issues. Availability, errors and specification subject to change without notice.

UNOPAL PRIVATE LIMITED
8, UBI ROAD 2, #06-20, ZERVEX
SINGAPORE 408538

TEL: +65-6747 0083
FAX: +65-6747 6041

EMAIL: unopal@singnet.com.sg
WEBSITE: www.unopal.com.sg

RPM Monitor Metal Barrel-M30

General Data

- Metal housing
- Threaded barrel M30x1,5
- AC 2-wire
- Function display LED
- Degree of protection IP67
- Inhibition at start: 9s
- Sensitivity adjustment by potentiometer
- Output NC to ensure safety (fail-safe)

Technical Data

Type	Rated operating distance S_n	Mounting	Output function	Output type	Voltage-range U_B	Rated current	Range of speed adjustment	Ambient temperature	Connection	Mechanical Drawing
Fi10R-M30-CSA3L	10 mm	flush	NC	AC	20…250 VAC	≤300 mA	3…3000 RPM	-25…70 °C	2 m cable	1
Ni15R-M30-CSA3L	15 mm	non flush	NC	AC	20…250 VAC	≤300 mA	3…3000 RPM	-25…70 °C	2 m cable	1

Connection Diagram

Bu = blue; Bn = brown; Bk = black; Wh = white; (1-4) = Connector pin

Cable

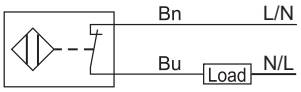

AC-2 wire NC

Mechanical Drawing

Drawing 1

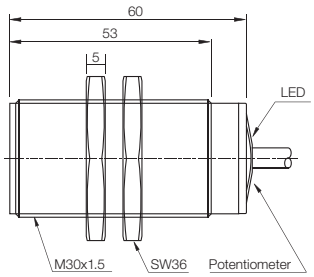

Drawing 2

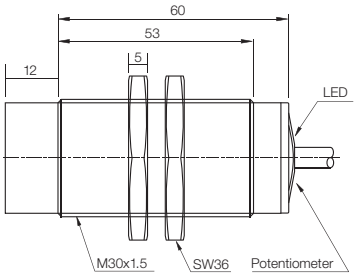

Approvals
Certificates

CE

This edition replaces all previous issues. Availability, errors and specification subject to change without notice.

UNOPAL PRIVATE LIMITED
8, UBI ROAD 2, #06-20, ZERVEX
SINGAPORE 408538

TEL: +65-6747 0083
FAX: +65-6747 6041

EMAIL: unopal@singnet.com.sg
WEBSITE: www.unopal.com.sg

High Pressure Resistant

General Data

- Stainless steel housing
- Threaded barrel
- DC 3-wire
- Degree of protection IP68
- Pressure range max. 500 bar

Technical Data

Type	Rated operating distance S_n	Mounting	Output function	Output type	Voltage-range U_B	Rated current	Switching frequency	Ambient temperature	Connection	Mechanical Drawing
Fi1.5D-KM12-OP6	1,5mm	flush	NO	PNP	10…30VDC	≤200mA	1500Hz	-25…70°C	2m cable	1
Fi1.5D-KM12-ON6	1,5mm	flush	NO	NPN	10…30VDC	≤200mA	1500Hz	-25…70°C	2m cable	1
Fi1.5D-KM12-CP6	1,5mm	flush	NC	PNP	10…30VDC	≤200mA	1500Hz	-25…70°C	2m cable	1
Fi1.5D-KM12-CN6	1,5mm	flush	NC	NPN	10…30VDC	≤200mA	1500Hz	-25…70°C	2m cable	1
Fi1.5D-KM12-OP6-Q12	1,5mm	flush	NO	PNP	10…30VDC	≤200mA	1500Hz	-25…70°C	M12 connector	2
Fi1.5D-KM12-ON6-Q12	1,5mm	flush	NO	NPN	10…30VDC	≤200mA	1500Hz	-25…70°C	M12 connector	2
Fi1.5D-KM12-CP6-Q12	1,5mm	flush	NC	PNP	10…30VDC	≤200mA	1500Hz	-25…70°C	M12 connector	2
Fi1.5D-KM12-CN6-Q12	1,5mm	flush	NC	NPN	10…30VDC	≤200mA	1500Hz	-25…70°C	M12 connector	2
Fi2D-KM16-OP6	2mm	flush	NO	PNP	10…30VDC	≤200mA	1000Hz	-25…70°C	2m cable	3
Fi2D-KM16-ON6	2mm	flush	NO	NPN	10…30VDC	≤200mA	1000Hz	-25…70°C	2m cable	3
Fi2D-KM16-CP6	2mm	flush	NC	PNP	10…30VDC	≤200mA	1000Hz	-25…70°C	2m cable	3
Fi2D-KM16-CN6	2mm	flush	NC	NPN	10…30VDC	≤200mA	1000Hz	-25…70°C	2m cable	3
Fi2D-KM16-OP6-Q12	2mm	flush	NO	PNP	10…30VDC	≤200mA	1000Hz	-25…70°C	M12 connector	4
Fi2D-KM16-ON6-Q12	2mm	flush	NO	NPN	10…30VDC	≤200mA	1000Hz	-25…70°C	M12 connector	4
Fi2D-KM16-CP6-Q12	2mm	flush	NC	PNP	10…30VDC	≤200mA	1000Hz	-25…70°C	M12 connector	4
Fi2D-KM16-CN6-Q12	2mm	flush	NC	NPN	10…30VDC	≤200mA	1000Hz	-25…70°C	M12 connector	4

Connection Diagram

Bu = blue; Bn = brown; Bk = black; Wh = white; (1-4) = Connector pin M12

Cable

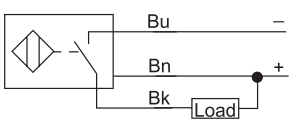

NPN NO

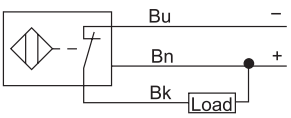

NPN NC

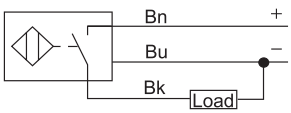

PNP NO

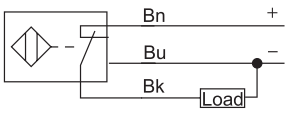

PNP NC

Connector

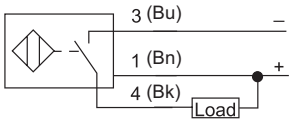

NPN NO

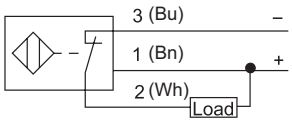

NPN NC

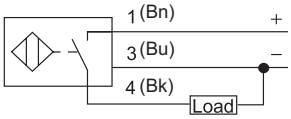

PNP NO

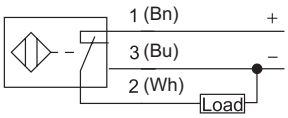

PNP NC

Approvals Certificates

CE

This edition replaces all previous issues. Availability, errors and specification subject to change without notice.

UNOPAL PRIVATE LIMITED
8, UBI ROAD 2, #06-20, ZERVEX
SINGAPORE 408538

TEL: +65-6747 0083
FAX: +65-6747 6041

EMAIL: unopal@singnet.com.sg
WEBSITE: www.unopal.com.sg

High Pressure Resistant

Mechanical Drawing

Drawing 1

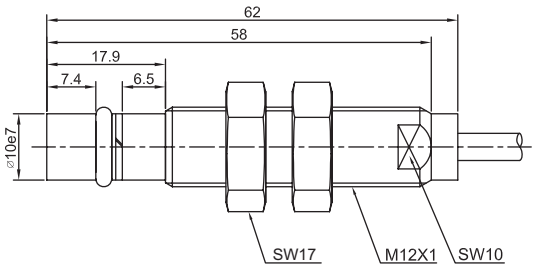

Drawing 2

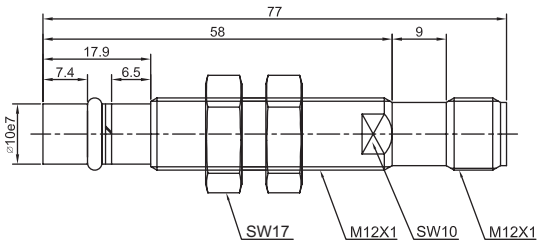

Drawing 3

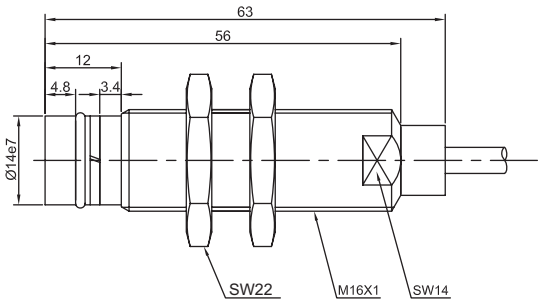

Drawing 4

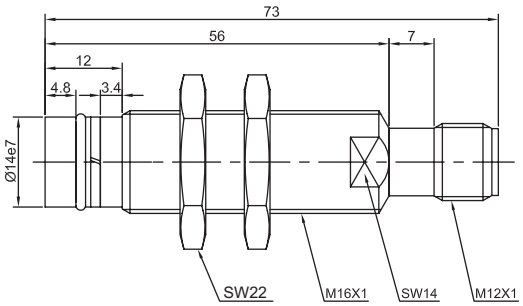

UNOPAL Private Limited
8, Ubi Road 2, #06-20, Zervex
Singapore 408538
Tel: +65-6747 0083
Fax: +65-6747 6041
E-mail: unopal@singnet.com.sg
Website:www.unopal.com.sg

Approvals
Certificates